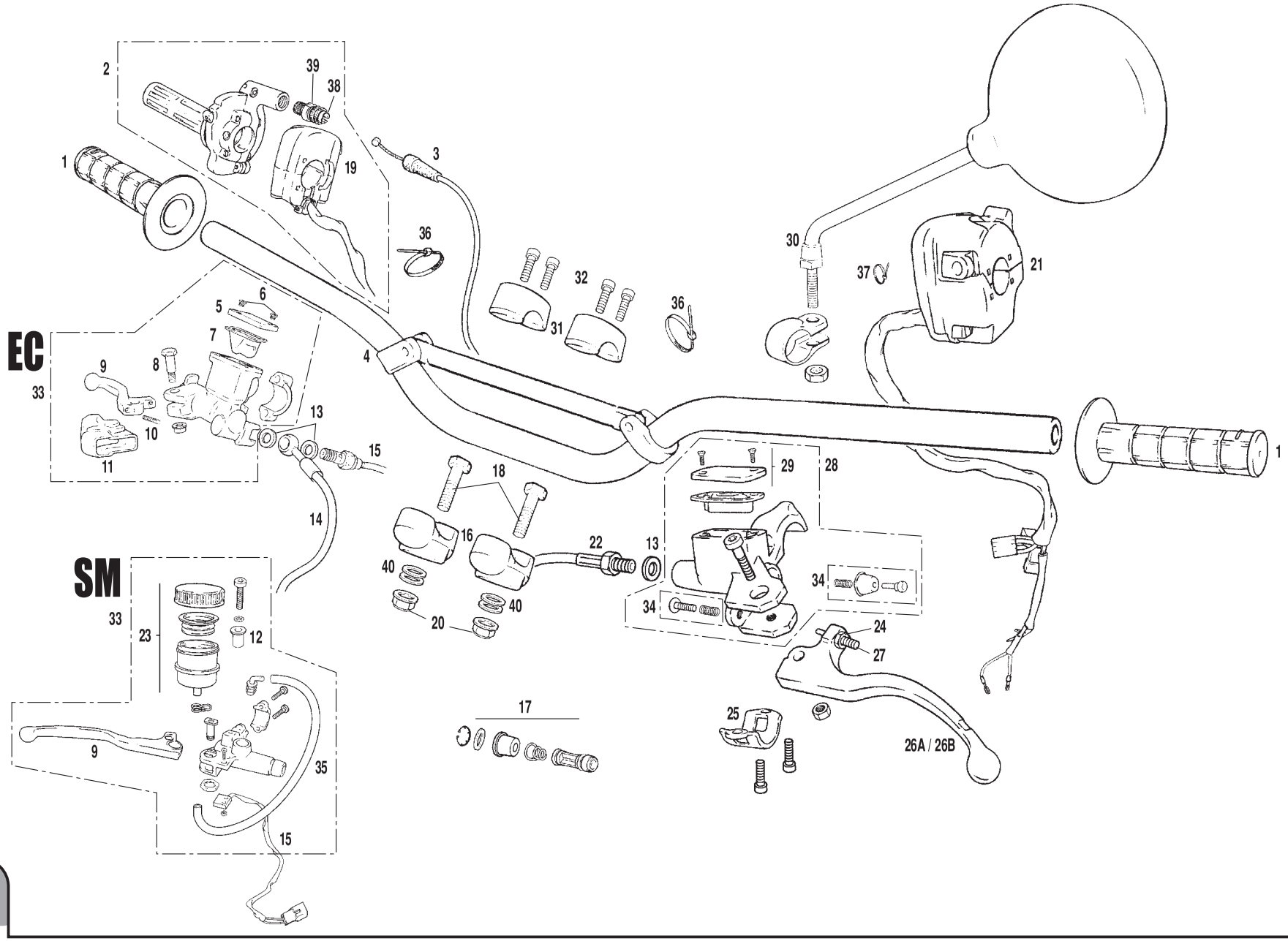
EC
SM
1
2
3
4
5
6
7
8
9
10
11
12
13
14
15
16
17
18
19
20
21
22
23
24
25
26A / 26B
27
28
29
30
31
32
33
34
35
36
37
38
39
40

Nº	DESCRIPCION / *DESCRIPTION*	EC FSE 2003	SM FSE 2003	Cant.
1	JUEGO DE EMPUÑADURAS / *HANDLEBAR GRIP (PAIR)*	BE250236002		1
2	PUÑO DE GAS / *TWIST GRIP*	BFS450324007		1
3	CABLE DE GAS / *THROTTLE CABLE*	BFS400124008		1
4	MANILLAR COMPLETO / *STEERING HANDLEBAR SET*	BE250224001		1
5	TAPA BOMBA FRENO / *BRAKE PUMP COVER*	BC25922210		1
6	TORNILLO TAPA BOMBA / *BRAKE PUMP SCREW*	BC25922217		2
7	GOMA ANTIESPUMANTE / *NO-FOAM RUBBER*	BC25922216		1
8	TORNILLO ESPECIAL / *SPECIAL SCREW*	BC25922212		1
9	MANETA FRENO DELANTERO / *FRONT BRAKE LEVER*	BC250022045	BE250122045SM	1
10	TENSOR MANETA BOMBA / *PUMP LEVER TENSOR*	BC25922218		1
11	GUARDAPOLVO / *DUST COVER*	BC25922213		1
12	CASQUILLO SILENTBLOCK SILENCIADOR / *EXHAUST SILENTBLOCK BUSHING*		BE250026000	1
13	ARANDELA LATIGUILLO 10X14X1 / *10X14X1 HOSE WASHER*	BE25622007		3
14	LATIGUILLO FRENO DELANTERO / *FRONT BRAKE HOSE*	BE250022002	BE250222002SM	1
15	INTERRUPTOR 23.024/1 STOP BOMBA NISSIN / *NISSIN PUMP STOP 23.024/1 SWITCH*	BE250034003/2	BE250134003SM	1
16	BRIDA SUJECCION MANILLAR INFERIOR / *HANDLEBAR CLAMP (LOWER)*	BE25814013		2
17	KIT PISTON BOMBA FRENO “A” / *“A” BRAKE PUMP PISTON KIT*	BC25922219		1
19	CONMUTADOR ARRANQUE / *STARTING COMMMAND*	BFS400134027		1
18	HEXAGONAL 10X40 / *10X40 HEXAGONAL BOLT*	T0110040		2
20	TUERCA AUTOBLOCANTE BAJA M10 CON ARANDELA / *M10 SELF-LOCKING NUT*	T2210000		2
21	CONMUTADOR LUZ / *LIGHT SWITCH*	BFS400134001		1
22	LATIGUILLO EMBRAGUE / *CLUTCH HOSE*	BE25622003		1
23	DEPÓSITO LIQUIDO FRENOS SM / *SM BRAKE FLUID TANK*		BE250110016SM	1
24	TORNILLO REGULACIÓN MANETA / *ADJUSTING LEVER SCREW*	BT27922046		1
25	SOPORTE BOMBA EMBRAGUE / *CLUTCH PUMP CLAMP*	BE250022211		1
26a	MANETA EMBRAGUE CORTA / *SHORT CLUTCH LEVER*	BT27922040		1
26b	MANETA EMBRAGUE LARGA (SERIE) / *LONG CLUTCH LEVER (STANDARD)*	E200701		1
27	TUERCA M6 BAJA / *M6 LOW NUT*	T2006001		1
28	BOMBA EMBRAGUE HIDRÁULICO / *HYDRAULIC CLUTCH PUMP*	BE250022009		1
29	KIT TAPA BOMBA FRENO Y EMBRAGUE / *CLUTCH AND BRAKE PUMP COVER KIT*	BT27722210		1
30	ESPEJO RETROVISOR / *REAR-VIEW MIRROR*	L300760		1
31	BRIDA SUJECCIÓN MANILLAR SUPERIOR / *HANDLEBAR CLAMP (UPPER)*	BE25814012		2
32	TORNILLO SUJECCIÓN BRIDA MANILLAR 8X30 / *8X30 CLAMP SCREW*	T0308030		4

Nº	DESCRIPCION / *DESCRIPTION*	EC FSE 2003	SM FSE 2003	Cant.
33	BOMBA FRENO DELANTERO / *FRONT BRAKE PUMP*	BC25922008/2		1
34	KIT REPARACIÓN / *REPARATION KIT*	R346000	BE250122008SM	1
35	TUBO LÍQUIDO FRENO A BOMBA / *BRAKE TO PUMP LIQUID HOSE*		BFS400310116SM	1
36	BRIDA GRANDE / *BIG CLAMP*	BC25922211		2
37	BRIDA PEQUEÑA / *LITTLE CLAMP*	BE25634010		1
38	TENSOR CABLE GAS / *THROTTLE CABLE TENSOR*	BFS400124012		1
39	TUERCA TENSOR / *TENSOR NUT*	BFS400124013		1
40	ARANDELA 3.5X30X10 / *3.5X30X10 WASHER*	BE250314035		4

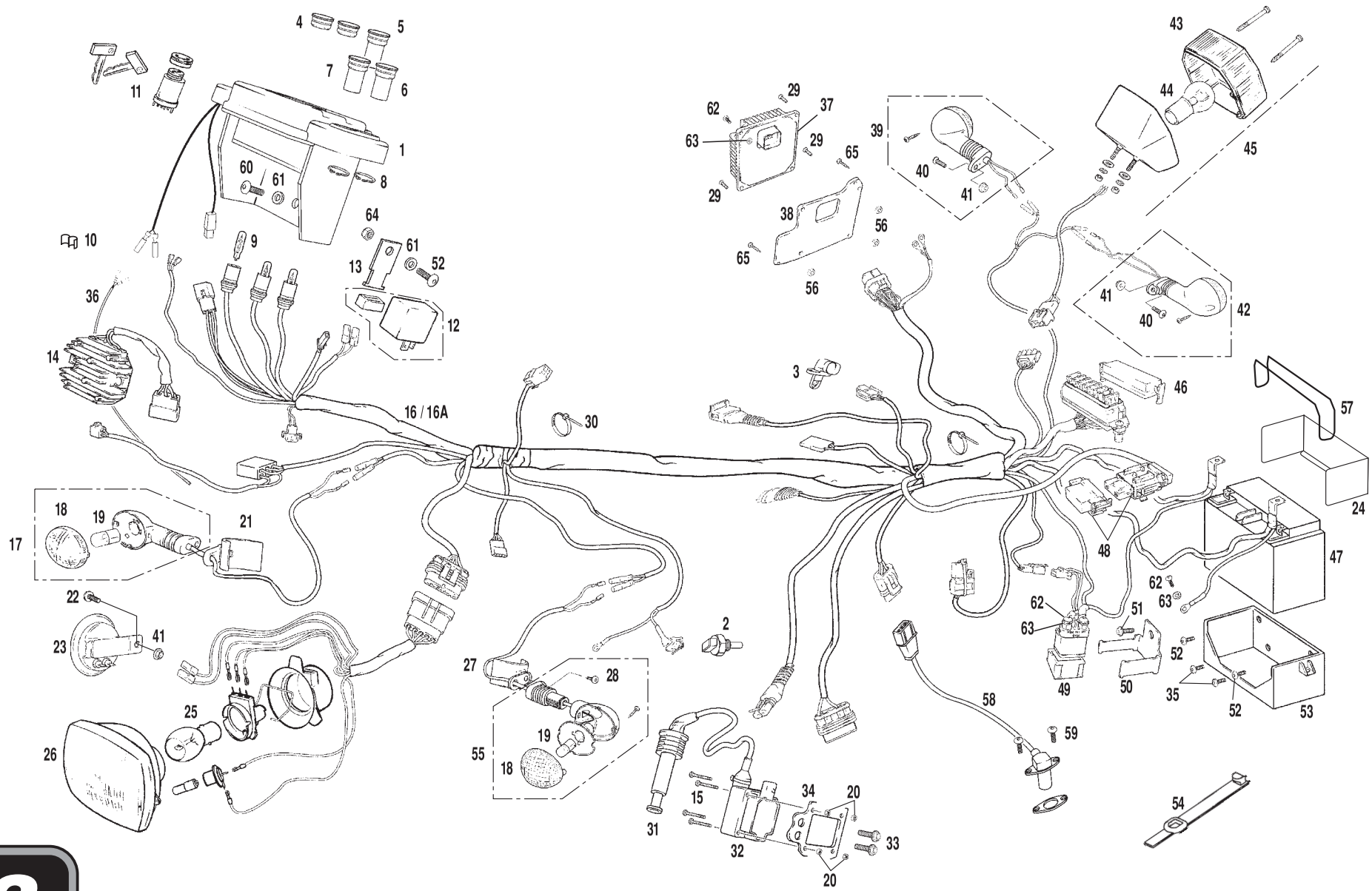
4
5
7
6
11
1
60 / 61
8
64
10
9
61
13
52
12
36
14
16 / 16A
30
3
29
62
37
63
29
65
29
39
40
41
38
56
65
56
43
44
45
41
40
42
46
57
24
48
47
62
63
51
52
35
52
53
49
50
58
59
54
18
19
21
17
22
23
41
25
26
27
28
19
55
18
2
15
31
32
34
20
33
20

Nº	DESCRIPCION / *DESCRIPTION*	FSE 400 cc.	FSE 450 cc.	Cant.
1	CTO. MULTIFUNCIÓN ENDURO 2003 FSE / *2003 ENDURO MULTIFUNCTION*	BFS400334045		1
2	SENSOR AGUA / *WATER SENSOR*	MFS400180004		1
3	SENSOR AIRE / *AIR SENSOR*	MFS400180003		1
4	TAPÓN TESTIGO NEGRO / *BLACK LIGHT CAP*	BE250134043		2
5	TESTIGO LUZ INTERMITENTE / *INDICATOR LIGHT*	BE250134036		1
6	TESTIGO LUZ POSICIÓN / *SHORT LIGHT INTICATOR*	BE250134037		1
7	TESTIGO LUZ LARGA / *LONG LIGHT INDICATOR*	BE250134038		1
8	CLIP TESTIGO / *LIGHT CLIP*	BE250134042		5
9	BOMBILLA 12V1,2-9W / *BULB 12V1.2-9W*	L300123		4
10	PASACABLES CTA. KM. ENDURO 2003 / *CABLE PASS SPEED COUTER*	BE250334053		2
11	CERRADURA CONTACTO CIERRE FSE450-2003 / *CONTACT LOCK WITH CATCH*	BFS450334032		1
12	CAJA INTERMITENCIAS / *INTERMITENT BOX*	BS25734055		1
13	SOPORTE CAJA INTERMITENCIAS / *INTERMITENT BOX SUPPORT*	BFS400134057		1
14	REGULADOR / *REGULATOR*	MFS400134009		1
15	ALLEN 3X25 / *3X25 ALLEN BOLT*	T0310322		4
16	INSTALACION ELECTRICA FSE / *ELECTRICAL INSTALLATION*		MFS450380104	1
16A	INSTALACION ELECTRICA RACING FSE / *ELECTRICAL INSTALLATION RACING*		MFS450380104R	1
17	INTERMITENTE DERECHO DELANTERO / *RIGHT FRONT INDICATOR*	BE250134018		1
18	TAPA INTERMITENTE / *INDICATOR COVER*	BE250134120		4
19	BOMBILLA / *LAMP*	L200118		4
20	TUERCA M3 AUTOBLOCANTE / *SELF-LOCKING NUT M3*	T2103002		4
21	SOP. INTERMITENTE DELANTERO DERECHO / *RIGHT FRONT INDICATOR HOLDER*	BE250134017		1
22	TORNILLO 6X20 / *6X20 SCREW*	T0706020		1
23	CLAXON / *HORN*	BIE500134020		1
24	ESPUMA FIJACION CAJA BATERIA FSE400-4T / *BATTERY FOAM*	BFS400134091		1
25	BOMBILLA 12V45- 45W / *12V45 – 45W BULB*	L300124		1
26	OPTICA NORMAL / *STANDARD OPTIC*	BE250220024		1
27	SOP. INTERMITENTE DELANTERO IZQUIERDO / *LEFT FRONT INDICATOR HOLDER*	BE250134020		1
28	TORNILLO CHAPA 6,3X16 / *SPECIAL SCREW*	T0706316		2
29	ULS 5X16 / *5X16 ULS BOLT*	T0505016		3
30	BRIDA UNEX 4,8X36 / *UNEX CLAMP 4.8X36*	BE25634007		2
31	PIPA BUJIA / *SPARK PLUG CAB*	BFS400134000		1
32	BOBINA / *IGNITION COIL*	MFS400180006		1

Nº	DESCRIPCION / *DESCRIPTION*	FSE 400 cc.	FSE 450 cc.	Cant.
33	TORNILLO ESPECIAL 6X16 / *6X16 SPECIAL SCREW*	T0206016		2
34	SOPORTE BOBINA / *IGNITION COIL SUPPORT*	BFS400310941		1
35	ULS 6X14 / *6X14 ULS BOLT*	T0556014		2
36	CABLE MULTIFUNCION TT 2003 / *MULTIFUNCTION CABLE*	BE250334050		1
37	CENTRALITA / *SWITCHBOARD*	MFS400180001	MFS450380001	1
38	SOPORTE CENTRALITA / *SWITCHBOARD SUPPORT*	BFS400134108/2		1
39	INTERMITENTE DERECHO TRASERO / *RIGHT REAR INDICATOR*	BE250134021		1
40	ULS 6X16 NEGRO / *6X16 BLACK ULS*	T0506016N		2
41	TUERCA CON ARANDELA M6 / *M6 NUT WITH WASHER*	T2206002		3
42	INTERMITENTE IZQUIERDO TRASERO / *LEFT REAR INDICATOR*	BE250134022		1
43	CRISTAL FARO TRASERO / *REAR LIGHT CAP*	BP25734015		1
44	BOMBILLA 12V5-21W / *12V5-21W BULB*	L300116		1
45	PILOTO TRASERO EC2002 / *EC2002 REAR LIGHT*	BE250234015		1
46	TAPA CAJA FUSIBLES / *FUSE BOX CAP*	MFS400180114		1
47	BATERIA EC400-4T / *EC400 4T BATTERY*	BFS400134080/3		1
48	FUSIBLE 30A / *30A FUSE*	MFS400180113		1
49	RELE ARRANQUE / *STARTING RELAY*	BFS400134075/2	BFS400134075/2	1
50	SOPORTE RELE ARRANQUE / *STARTING RELAY SUPPORT*	BFS400334076		1
51	TORNILLO ROSCA-CHAPA / *SEET THREAD SCREW*	T06035013		1
52	TORNILLO ULS 6X12 / *6X12 ULS SCREW*	T0556012		3
53	CAJA BATERIA EC400-4T / *BATTERY BOX*	BFS400134083		1
54	GOMA SUJECCION CDI / *CDI ELASTIC BAND*	BE250034100		1
55	INTERMITENTE IZQUIERDO DELANTERO / *LEFT FRONT INDICATOR*	BE250134019		1
56	TUERCA M5 BAJA AUTOBLOCANTE / *SELF-LOCKING M5 NUT*	T2105001		3
57	TORICA TAPA F.114X4 / *F114X4 COVER O'RING*	P270100		1
58	SENSOR GIRO / *TURN SENSOR*	MFS400180005		1
59	ULS 5x9 / *5x9 ULS BOLT*	T0505009		2
60	ULS 6X16 / *6X16 ULS BOLT*	T0506016		1
61	ARANDELA 6X18X1,5 / *6X18X1,5 WASHER*	T4006018		2
62	TORNILLO ULS 6X10 / *6X10 ULS BOLT*	T0506010		4
63	ARANDELA 6X12X1,5 / *6X12X1,5 WASHER*	T4006012		4
64	TUERCA M6 AUTOBLOCANTE BAJA / *LOWER M6 SELF-LOCKING NUT*	T2106000		1
65	TORNILLO ROSCA-CHAPA 4,8X13 / *4,8X13 SCREW*	T0606013		2

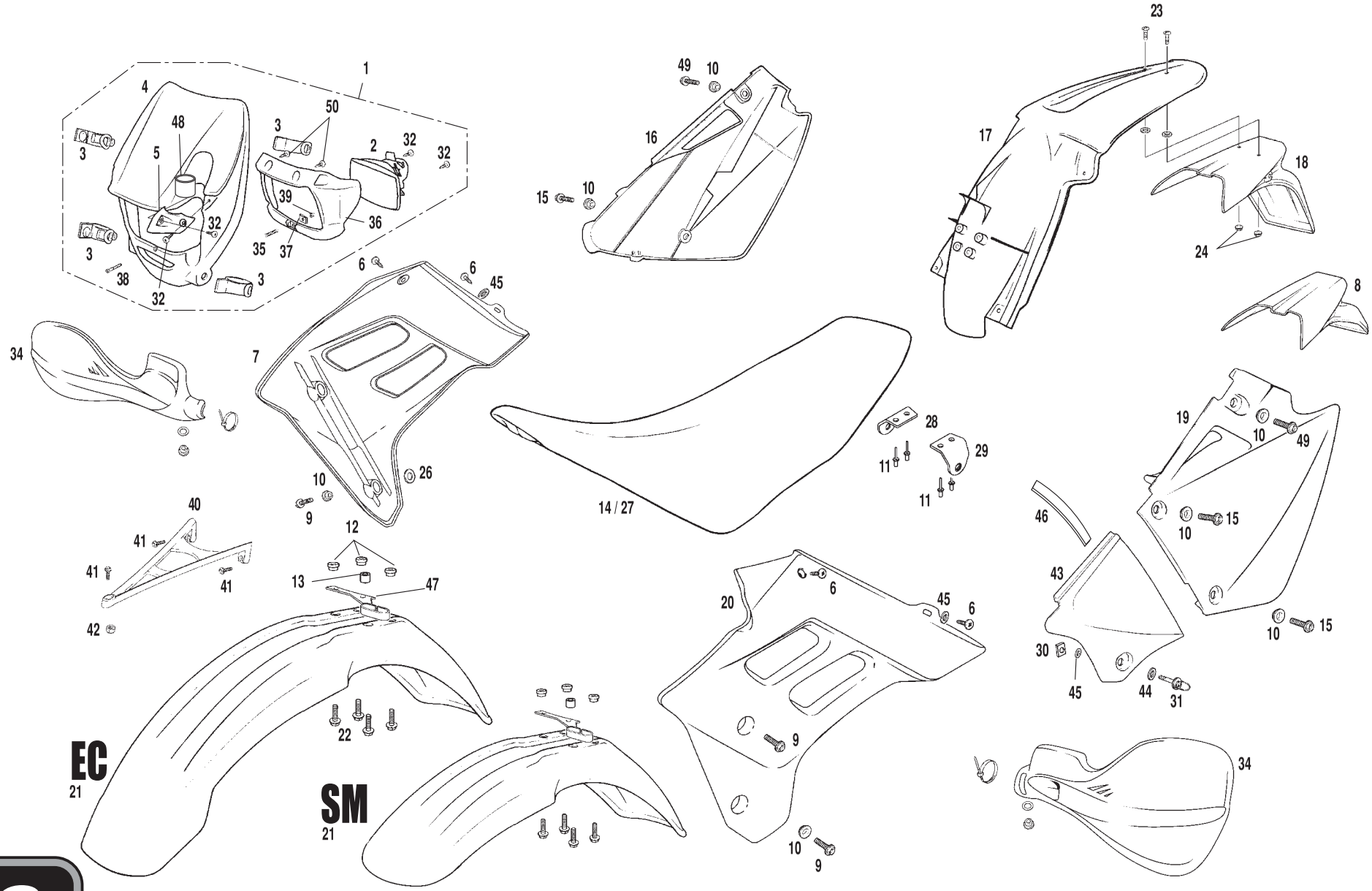
1
4
48
5
3
50
2
32
39
36
35
37
38
6
45
7
34
26
10
9
40
41
42
12
13
47
14 / 27
28
29
11
16
15
49
17
23
18
24
8
19
46
43
30
44
31
20
22
EC
21
SM
21

Nº	DESCRIPCION / *DESCRIPTION*	EC-FSE 2003	SM-FSE 2003	Cant.
1	CTO. FARO DELANTERO GRANADA 2001 / *GRANADA 2001 FRONT HEADLAMP*	BE250320020	BE250120020SM	1
2	OPTICA NORMAL / *STANDARD LAMP*	BE250220024		1
3	GOMA SUJECCIÓN FARO / *HEADLAMP ELASTIC BAND*	BE25636015		4
4	FARO DELANTERO GRANADA 2001 / *FRONT HEADLAMP GRANADA20001*	BE250320020	BE250120020SM	1
5	TAPETA GUÍA FARO / *HEADLAMP GUIDE COVER*	BX250120023	BE250120023SM	1
6	TORNILLO ROSCA CHAPA 4,8X13 / *SCREW 4,8X13*	T0606013		4
7	TAPA LAT. RADIADOR DERECHO FSE 4T / *FSE 4T RIGHT SIDE RADIATOR COVER*	BFS400320012	BFS400120012SM	1
8	PORTAMATRICULA COMPETICIÓN / *RACING LICENSE PLATE HOLDER*	BE250121003		1
9	TORNILLO ESPECIAL 6X16 ZINCADO / *ZINC-TREATED SPECIAL SCREW 6X16*	T0206016		4
10	CASQUILLO TAPA RADIADOR ALUMINIO / *ALUM. RADIATOR COVER BUSH*	BE250032060		9
11	REMACHE 14X4 / *14X4 RIVET*	BE25610017		4
12	CASQUILLO GUARDABARROS CON VOLONA / *FRONT FENDER BUSHING*	BE250014118		3
13	CASQUILLO GUARDABARROS DELANTERO / *FRONT FENDER BUSHING*	BE25714118		1
14	SILLIN / *SEAT*	BE250310015	BE250110015SM	1
15	TORNILLO ESPECIAL 6X20 / *6X20 SPECIAL SCREW*	T0206020		3
16	PORTA NÚMERO LATERAL DERECHO / *RIGHT SIDE COVER*	BE250320004	BE250320004SM	1
17	GUARDABARROS TRASERO / *REAR FENDER*	BFS400320007	BFS400120007SM	1
18	PORTAMATRICULA TRASERO EC2001 / *REAR LICENSE PLATE HOLDER*	BE250120003		1
19	PORTANÚMERO LATERAL IZQUIERDO / *LEFT SIDE COVER*	BE250320005	BE250320005SM	1
20	TAPA LAT. RADIADOR IZQUIERDO FSE 4T / *FSE 4T LEFT SIDE RADIATOR COVER*	BFS400320013	BFS400120013SM	1
21	GUARDABARROS DELANTERO EC2003 / *EC2003 FRONT FENDER*	BE250320006	BE250120006SM	1
22	TORNILLO ESPECIAL M6X25 / *M6X25 SPECIAL SCREW*	T0606025		4
23	TORNILLO PHILIPS M6X25 / *M6X25 PHILIPS SCREW*	T0706025		2
24	TUERCA AUTOBLOCANTE ALTA M6 / *M6 SELF-LOCKING NUT*	T2106002		2
25	TOPE GOMA PLACA LATERAL / *SIDE COVER RUBBER END*	BE250020104		2
26	ARANDELA NYLON 6,5X16X1 / *6.5X16X1 NYLON WASHER*	T06065017		4
27	FUNDA SILLIN / *SEAT COVER*	BE250310055	BE250110015SM	1
28	SOPORTE SILLIN DERECHO ALUMINIO / *RIGHT ALUM. SEAT HOLDER*	BFS400310019		1
29	SOPORTE SILLIN IZQUIERDO ALUMINIO / *LEFT ALUMINUM SEAT HOLDER*	BFS400310020		1
30	CIERRE RÁPIDO / *FAST LOCKING*	BE250128026		1
31	TORNILLO CIERRE RÁPIDO / *FAST-LOCKING SCREW*	BE250128027		1
32	TORNILLO ROSCA CHAPA 3.5X13 / *3,5X13 SCREW*	T0603513		4

Nº	DESCRIPCION / *DESCRIPTION*	FSE 2003	Cant.
34	JUEGO PARAMANOS HP20 / *HANDS-PROTECTOR SET*MUELLE TORNILLO	BTL400220034GC	1
35	REGULADOR OPTICA / *SCREW REG. LAMP SPRING*	BX250020026	1
36	SOPORTE FARO GRANADA / *GRANADA BASE LAMP*	BX250020027	1
37	GRAPA REGULADOR FARO GRANADA / *LAMP REGULATION NUT*	BX250020029	1
38	ALLEN REGULADOR OPTICA / *LAMP REGULATION ALLEN BOLT*	T0304035	1
39	TUERCA TORNILLO REGULADOR OPTICA / *SCREW LAMP REGULATION WASHER*	T2004000	1
40	TIRANTE GUARDABARROS DELANTERO / *FRONT FENDER BRACE*	BE250220039	1
41	TORNILLO ULS 6X20 / *6X20 SCREW*	T0506020	3
42	TUERCA M6 CON ARANDELA ESTRIADA / *M6 NUT WITH WASHER*	T2206000	1
43	TAPA LATERAL CAJA FILTRO / *AIR FILTER SIDE COVER*	BE250128025	1
44	ARANDELA 5X12X1,5 / *5X12X1,5 WASHER*	T4005012	1
45	ARANDELA NYLON 4X14X1 / *4X14X1 NYLON WASHER*	T6004141	3
46	JUNTA ESPUMA TAPA CAJA FILTRO / *AIR FILTER COVER GASKET*	BE250228031	1
47	GUÍA CABLE / *CABLE GUIDE*	BE25720016	1
48	ANILLA NEGRA / *BLACK O'RING*	BE25920053	1
49	TORNILLO ESPECIAL 6X25 / *6X25 SPECIAL SCREW*	T0206025	2
50	TORNILLO ROSCA-CHAPA 3X9 / *3X9 SCREW*	T1003009	2

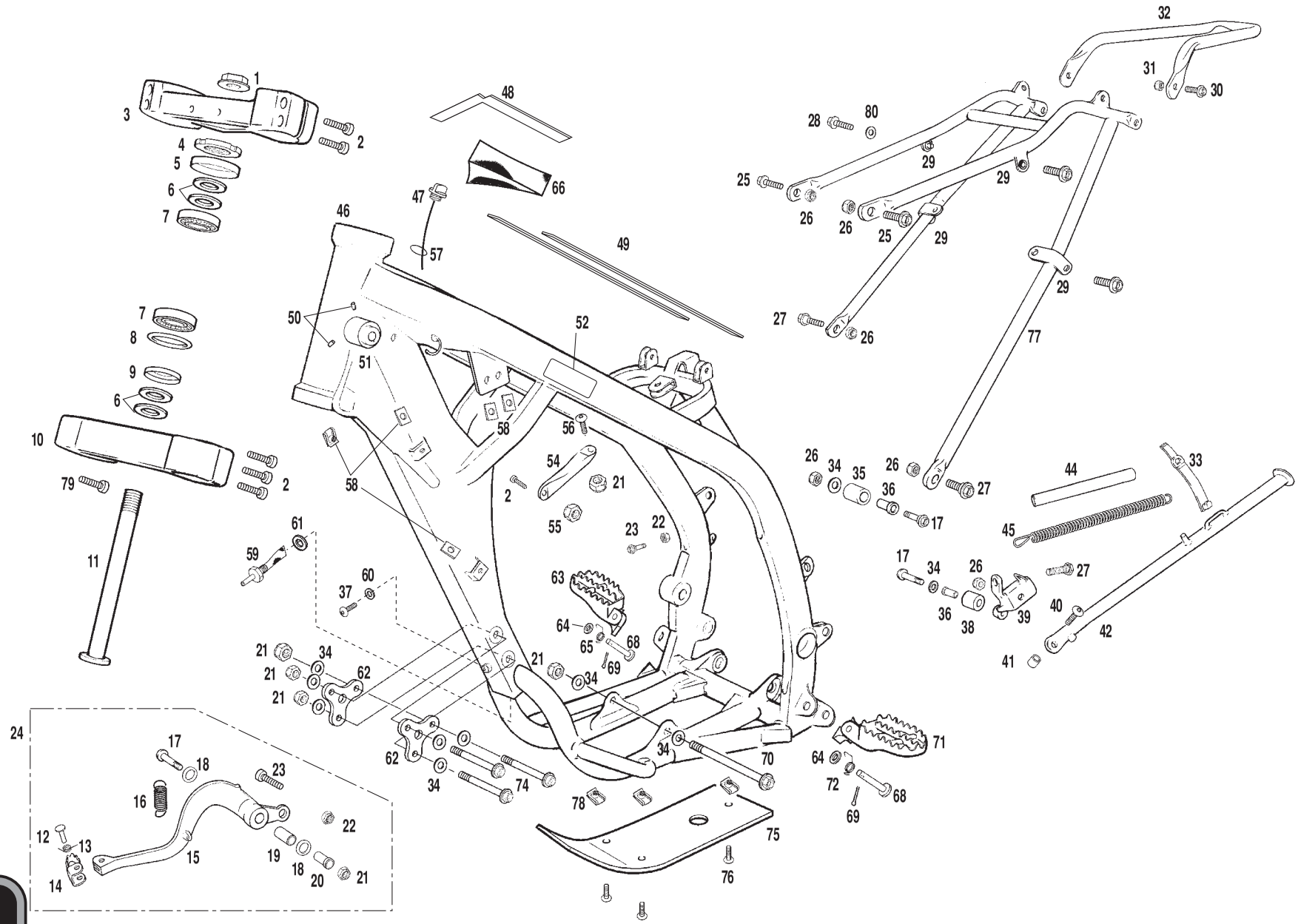
1
2
3
4
5
6
7
8
9
10
11
12
13
14
15
16
17
18
19
20
21
22
23
24
25
26
27
28
29
30
31
32
33
34
35
36
37
38
39
40
41
42
44
45
46
47
48
49
50
51
52
54
55
56
57
58
59
60
61
62
63
64
65
66
68
69
70
71
72
74
75
76
77
78
79
80

Nº	DESCRIPCION / *DESCRIPTION*	FSE 2003	Cant.
1	TUERCA DIRECCIÓN / *STEERING SHAFT NUT*	BE25610030	1
2	ALLEN 7X30 / *7X30 ALLEN BOLT*	T0307030	10
3	BRIDA SUPERIOR SUSPENSIÓN CROSS / *CROSS FORK CLAMP (UPPER)*	BC250014001	1
4	TUERCA DIRECIÓN INFERIOR / *LOWER STEERING SHAFT NUT*	BE25610029	1
5	GUARDAPOLVO COJINETE DIRECCIÓN / *BEARING DUST COVER*	BE25610126	1
6	ARANDELA DIRECCIÓN / *STEERING WASHER*	BE25610028	4
7	COJINETE DIRECCIÓN / *STEERING BEARING*	BE25610008	2
8	TORICA DIRECCIÓN 50X5 / *50X5 STEERING O'RING*	BE25610012	1
9	CAZOLETA DIRECCIÓN / *STEERING CAP*	BE25610026	1
10	BRIDA INFERIOR SUSPENSIÓN CROSS / *CROSS FORK CLAMP (LOWER)*	BC250214002	1
11	TIJA DIRECCIÓN / *STEERING SHAFT*	BE25614003	1
12	PASADOR PUNTERA DIN 660 6X22 / *DIN 660 6X22 BRAKE PIN*	BE25922018	1
13	MUELLE PUNTERA PEDAL RETRÁCTIL / *BRAKE PEDAL END SPRING*	ME25636029	1
14	PUNTERA PEDAL FRENO EC4T / *EC4T BRAKE PEDAL END*	BT27922017	1
15	PEDAL FRENO / *BRAKE PEDAL*	BE250022016	1
16	MUELLE PEDAL FRENO / *BRAKE PEDAL SPRING*	BE25610023	1
17	TORNILLO ESPECIAL 8X45 / *8X45 SPECIAL SCREW*	T0208045	3
18	TORICA PEDAL / *PEDAL O'RING*	ME25610026	2
19	GLACIER PEDAL FRENO / *BRAKE PEDAL BEARING*	BE250010009	1
20	CASQUILLO SOPORTE PEDAL FRENO / *BRAKE PEDAL SUP. BUSHING*	BE250210916	1
21	TUERCA AUTOBLOCANTE CON ARANDELA M8 / *M8 SELF-LOCKING NUT*	T2208002	1
22	TUERCA HEXAGONAL M6 BAJA / *M6 LOW HEXAGONAL BOLT*	T2106001	2
23	HEXAGONAL 6X25 / *6X25 HEXAGONAL SCREW*	T0106025	2
24	CTO. PEDAL FRENO / *BRAKE PEDAL SET*	BFS400322016CT	1
25	TORNILLO ESPECIAL 8X25 / *8X25 SPECIAL SCREW*	T02080255	2
26	TUERCA AUTOBLOCANTE M8 BAJA / *LOW M8 SELF-LOCKING NUT*	T2108001	6
27	TORNILLO ESPECIAL 8X20 / *8X20 SPECIAL SCREW*	T0208020	3
28	ULS 6X25 / *6X25 ULS*	T0506025	1
29	TUERCA REMACHABLE / *RIVETABLE NUT*	T2706000	2
30	ALLEN 8X25 / *8X25 ALLEN SCREW*	T0308025	2
31	TUERCA AUTOBLOCANTE M8 CON ARANDELA / *SELF-LOCKING M8 NUT*	T2208002	1
32	COLIN SOPORTE GUARDABARROS TRASERO ALUM. / *REAR FENDER ALUMINIUM SUPPORT*	BFS400110018	1

Nº	DESCRIPCION / *DESCRIPTION*	EC FSE 2003	SM FSE 2003	Cant.
33	GOMA SUJECCIÓN CDI / *CDI HOLDER RUBBER*	BE250034100		1
34	ARANDELA 8X20X1,5 / *8X20X1,5 WASHER*	T4008020		17
35	RODILLO GUÍA CADENA SUPERIOR / *UPPER CHAIN ROLL*	BE25610014		1
36	CASQUILLO RODILLO ,25X12X25 / *6,25X12X25 BUSHING*	BE25612016		2
37	TORNILLO ESPECIAL 6X14 / *6X14 SPECIAL SCREW*	T0206014		1
38	RODILLO GUÍA CADENA 13,5X32X23,5 / *13,5X32X23,5 LOWER CHAIN ROLL*	BE25610032		1
39	SOPORTE CABALLETE / *SIDE STAND HOLDER*	BE250212023		1
40	ULS 8X30 / *8X30 ULS BOLT*	T0508030		1
41	CASQUILLO CABALLETE / *SIDE STAND BUSHING*	BE250112011		1
42	CABALLETE / *SIDE STAND BRACKET*	BE250112010	BFS400212010SM	1
44	TUBO PLÁSTICO PROTECCION MUELLE / *SPRING PLASTIC TUBE COVER*	BT27912050		1
45	MUELLE CABALLETE / *SIDE STAND BRACKET SPRING*	BE25610039		1
46	CHASIS ENDURO 400-2003 4T / *400-2003 4T EC FRAME*	BFS400310000		1
47	TAPÓN DEPÓSITO ACEITE / *OIL TANK CAP*	BFS400110079		1
48	TIRA ADHESIVA ESPUMA 17 CM. / *17CM. FOAM STICKER*	BFS400138019		1
49	TIRA ADHESIVA ESPUMA 26 CM. / *26CM. FOAM STICKER*	BE25638018		2
50	CTO. REMACHE ANTIROBO / *STEERING LOCK RIVET SET*	BE250010076		1
51	ANTI-ROBO / *STEERING LOCK*	BE250010075		1
52	AD. TRANSPARENTE Nº BASTIDOR / *FRAME NUMBER CLEAR STICKER*	PU000138015		1
54	TIRANTE CULATA / *CYLINDER HEAD BRACE*	BFS400310050		1
55	TUERCA CON ARANDELA ESTRIADA / *NUT WITH WASHER*	T2208000		1
56	ULS 8X20 / *8X20 ULS BOLT*	T0508020		1
57	TORICA / *O'RING*	BFS400110082		1
58	TUERCA NUT M6 / *M6 NUT*	T2606000		6
59	RACORD CON FILTRO / *RACORD WITH FILTER*	BFS400132209		1
60	ARANDELA COBRE 6X10X1,5 / *6X10X1,5 WASHER*	BFS400132213		1
61	ARANDELA 18,2X24X1,5 / 18,2X24X1,5 WASHER	T4006008		1
62	SOPORTE MOTOR / *ENGINE SUPPORT*	BFS400110989		2
63	ESTRIBO DERECHO / *RIGHT FOOTREST*	BE250010002		1
64	ARANDELA / *WASHER*	T4001021		2
65	MUELLE ESTRIBO DERECHO / *RIGHT FOOTREST SPRING*	BE25610037		1
66	ESPUMA CHASIS / *FRAME FOAM*	BFS400132215		1

Nº	DESCRIPCION / *DESCRIPTION*	FSE 2003	Cant.
68	CASQUILLO ESTRIBO / *FOOTREST BUSHING*	BE25610006	2
69	CLAVILLA ZINC / *ZINC PIN*	BE25622022	2
70	TORNILLO ESPECIAL M8X103 / *8X103 SPECIAL SCREW*	T0208103	1
71	ESTRIBO IZQUIERDO / *LEFT FOOTREST*	BE250010003	1
72	MUELLE ESTRIBO IZQUIERDO / *LEFT FOOTREST SPRING*	BE25610038	1
74	TORNILLO ESPECIAL 8X108 / *8X108 SPECIAL SCREW*	T0208108	3
75	PROTECTOR CARTER / *CARTER PROTECTOR*	BFS400110930	1
76	ULS 8X16 / *8x16 ULS BOLT*	T0508016	3
77	COLA CHASIS / *FRAME TAIL*	BFS400110001	1
78	TUERCA NUT M8 RÁPIDA / *M8 FAST LOCK NUT*	BT280010041	3
79	ALLEN 8X16 / *8X16 ALLEN BOLT*	T0308016	2
80	ARANDELA 6X18X1,5 / *6X18X1,5 WASHER*	T4006018	1

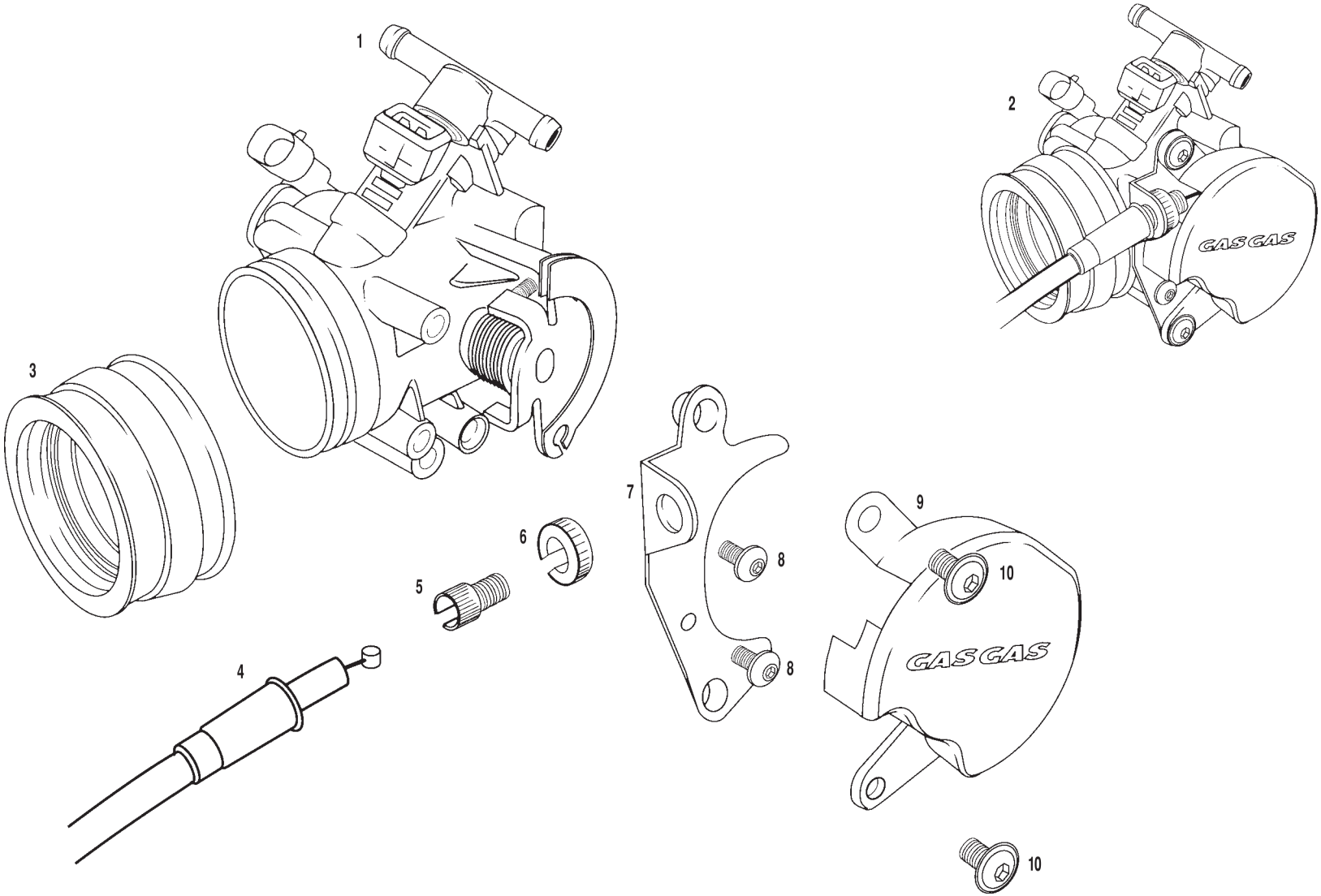
1
2
3
4
5
6
7
8
8
9
10
10
GAS GAS
GAS GAS

Nº	DESCRIPCION / *DESCRIPTION*	FSE 400	FSE 450	Cant.
1	INYECTOR FSE / *FSE INJECTOR*	MFS400180002	MFS4503180002	1
2	CTO. INYECTOR FSE / *FSE INJECTOR SET*	MFS400180000	MFS4503180000	1
3	TUBERA ADMISIÓN / *INTAKE RUBBER*	MFS400116131		1
4	CABLE GAS / *THROTTLE CABLE*	BFS400124008		1
5	TUERCA TENSOR CABLE GAS / *THROTTLE GAS TENSOR NUT*	BFS400124013		1
6	TENSOR CABLE GAS / *THROTTLE GAS TENSOR*	BFS400124012		1
7	SOPORTE CABLE GAS / *THROTTLE GAS SUPPORT*	BFS400124014		1
8	ULS 5X10 / *5X10 ULS BOLT*	T0505010		2
9	TAPA CABLE GAS / *THROTTLE GAS COVER*	MFS400180007		1
10	ULS 6X10 CON ARANDELA / *6X10 ULS BOLT WITH WASHER*	T0556010		2

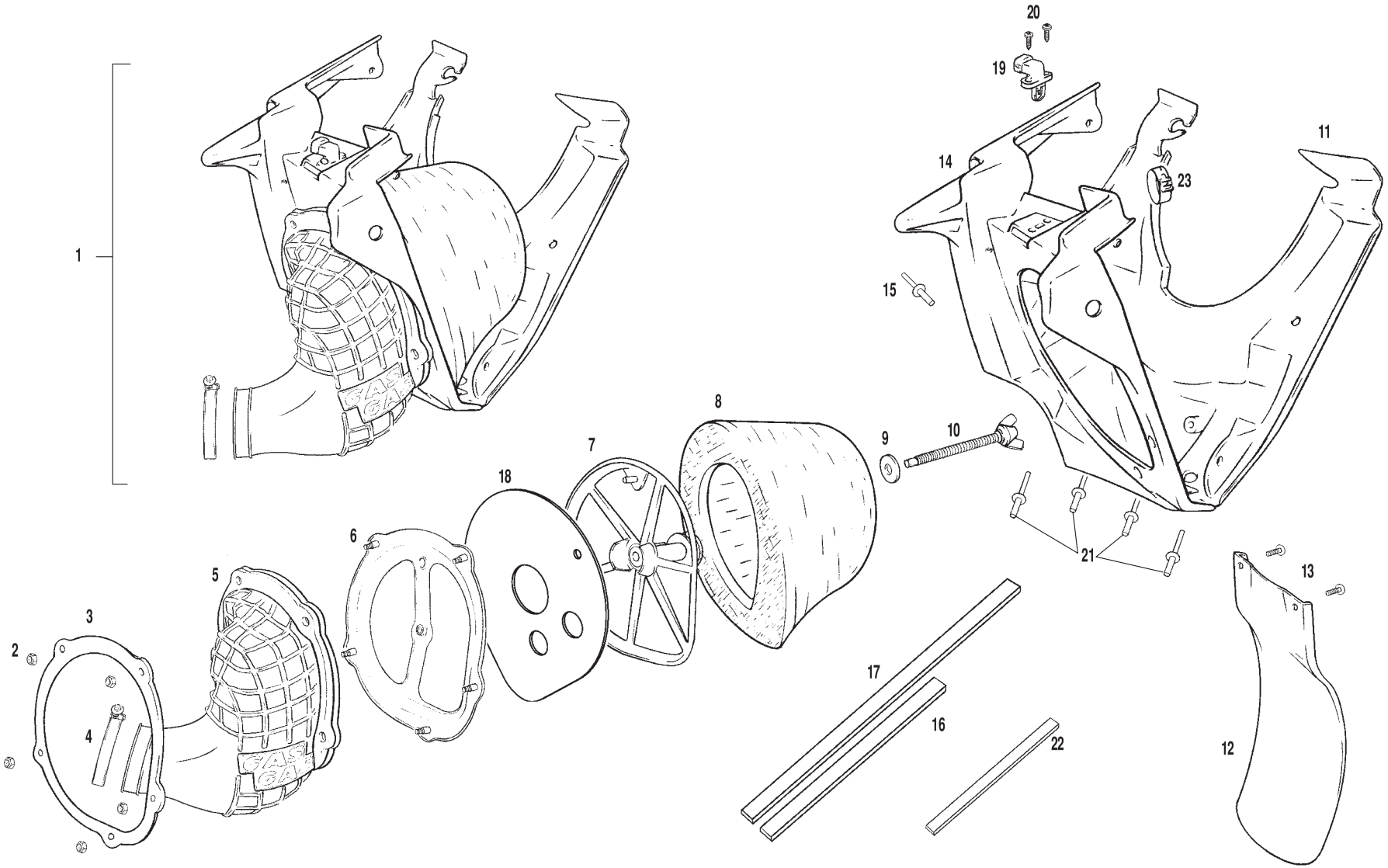
1
2
3
4
5
6
7
8
9
10
11
12
13
14
15
16
17
18
19
20
21
22
23

Nº	DESCRIPCION / *DESCRIPTION*	FSE 2003	Cant.
1	CTO. CAJA FILTRO / *AIR FILTER BOX SET*	BFS400228001	1
2	TUERCA M5 CON ARANDELA / *WASHER NUT M5*	T2205000	5
3	PLATINA SOPORTE JAULA FILTRO / *FILTER CARRIER SUPPORT*	BE25628021	1
4	ABRAZADERA 40-60 / *40-60 CLAMP*	L200047	2
5	GOMA TUBERA CAJA FILTRO / *AIR FILTER BOX RUBBER*	BFS400128017	1
6	PLATINA SOPORTE JAULA FILTRO INTERIOR / *INNER FILTER CARRIER SUPPORT*	BE25628020	1
7	JAULA FILTRO AIRE / *AIR FILTER CARRIER*	BE25628002	1
8	FILTRO AIRE / *AIR FILTER*	BE250128000	1
9	ARANDELA PLANA 6X16X1,5 / *6X16X1,5 PLAIN WASHER*	T4006016	1
10	VARILLA PALOM FILTRO / *FILTER BOLT*	BE25628003	1
11	SEMI-CAJA TUBERA FILTRO / *AIR FILTER SEMI-BOX*	BE250128015	1
12	PROTECTOR SUSPENSIÓN TRASERA / *REAR SHOCK ABSORBER PROTECTOR*	BE25620008	1
13	TORNILLO ESPECIAL 6X20 / *6X20 SPECIAL SCREW*	T0606020	2
14	SEMI-CAJA ESPUMA FILTRO / *AIR FILTER FOAM SEMI-BOX*	BE250128016	1
15	REMACHE 4X12 ALUMINIO / *ALUMINIUM RIVET RIVET*	T4504012	1
16	TIRA ADHESIVA 118 MM CAJA FILTRO / *118 MM. AIR FILTER BOX STICKER*	BE250128029	1
17	TIRA ADHESIVA 180 MM CAJA FILTRO / *180 MM. AIR FILTER BOX STICKER*	BE250128030	1
18	RESTRICTOR AIRE CAJA FILTRO / *FILTER BOX AIR RESTRICTOR*	BE2503 28014	1
19	SENSOR AIRE / *AIR SENSOR*	MFS400180003	1
20	TORNILLO 3X8 / *3X8 SCREW*	T1003009	2
21	REMACHE 4X18 NEGRO / *BLACK 4X18 RIVET*	T4504018	4
22	ESPUMA / *FOAM*	BE250328039	1
23	ABRAZADERA COBRA 21 / *21 CLAMP*	L200046	1

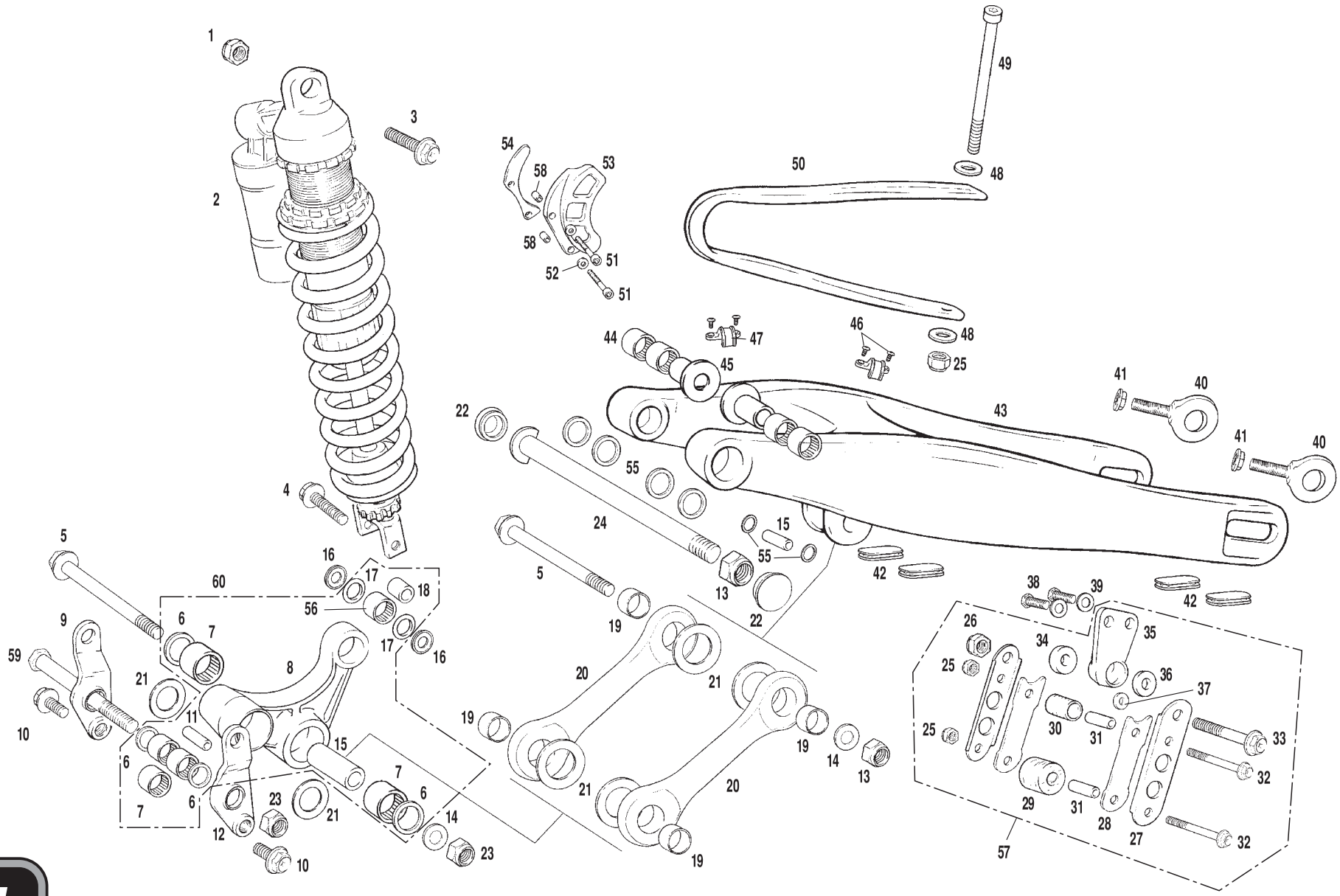
1
2
3
4
5
6
7
8
9
10
11
12
13
14
15
16
17
18
19
20
21
22
23
24
25
26
27
28
29
30
31
32
33
34
35
36
37
38
39
40
41
42
43
44
45
46
47
48
49
50
51
52
53
54
55
56
57
58
59
60

Nº	DESCRIPCION / *DESCRIPTION*	EC-FSE 2003	SM-FSE 2003	Cant.
1	TUERCA AUTOBLOCANTE M10 / *SELF-LOCKING NUT M10*	T2110001		1
2	AMORTIGUADOR TRASERO / *REAR SHOCK ABSORBER*	BFS400114004	BTL400214004	1
3	TORNILLO ESPECIAL M10X55 / *SPECIAL SCREW M10X55*	T0210055		1
4	TORNILLO M10X40X1,25 / *BOLT M10X40X1.25*	T0110042		1
5	TORNILLO ESPECIAL 14X95 / *SPECIAL SCREW 14X95*	T0201495		2
6	RETEN 28X22X4 BASCULANTE / *SWINGARM SEAL 28X22X4*	BE25610011		4
7	JAULA AGUJAS DL2216 / *NEEDLES BEARING DL2216*	BE25614010		5
8	BALANCIN / *ROCKER ARM*	BE25614005		1
9	SOPORTE BALANCIN DERECHO / *RIGHT ROCKER ARM SUPPORT*	BE250314006		1
10	TORNILLO ESPECIAL 12X25X1,25 / *SPECIAL SCREW 12X25X1.25*	T02012025		2
11	CASQUILLO EJE BASCULANTE / *SWINGARM SHAFT BUSHING*	BE25612005		1
12	SOPORTE BALANCIN IZQUIERDO / *LEFT ROCKER ARM SUPPORT*	BE250314007		1
13	TUERCA AUTOBLOCANTE M 14 / *SELF-LOCKING NUT M14*	BE25612009		4
14	ARANDELA 15X25X2,5 / *15X25X2.5 WASHER*	T4015025		2
15	CASQUILLO 14X22X57 / *14X22X57 BUSHING*	BE250310914		2
16	ARANDELA REGLAJE 21X10,2X1 / *21X10.2X1 SETTING WASHER*	T4001022		2
17	TORICA BIELETA 15X3,5 / *CONNECTING ROD O'RING*	BE25814015		2
18	CASQUILLO INF. AMORTIGUADOR D.16X21.60 / *SHOCK ABSORBER BUSHING (LOWER)*	BE25642005		1
19	CASQUILLO BIELETA / *CONNECTING ROD BUSHING*	BE25642002		4
20	BIELETA / *CONNECTING ROD*	BC250014008	BE120114008	2
21	ARANDELA REGLAJE 22,4X36X0,7 / *SETTING WASHER 22.4X36X0.7*	T4022036		6
22	TAPÓN BASCULANTE / *SWINGARM CAP*	BE25636001		2
23	TUERCA M14 AUTOBLOCANTE CON ARANDELA / *SELF-LOCKING M14 NUT WITH WASHER*	BE25612009		2
24	EJE BASCULANTE EC2003 / *EC2003 SWINGARM SHAFT*	BE250312008		1
25	TUERCA AUTOBLOCANTE M6 ALTA / *HIGH SELF LOCKING NUT M6*	T2106002		2
26	TUERCA AUTOBLOCANTE M8 BAJA / *LOW SELF LOCKING NUT M8*	T2108001		1
27	PLATINA GUIA CADENA / *CHAIN GUIDE BRACKET*	BE25912017		2
28	TIRA NYLON ANTIRUIDO / *ANTI-NOISE NYLON BAND*	BE25612022		2
29	RODILLO GUIA CADENA13,55X32X23,5 / *CHAIN GUIDE ROLLER 13.55X32X23.5*	BE25610032		1
30	RODILLO GUIA CADENA SUPERIOR / *UPPER CHAIN GUIDE ROLLER*	BE25610014		1
31	CASQUILLO GUIA CADENA / *CHAIN GUIDE BUSHING*	BE25610025		2
32	TORNILLO ESPECIAL 6X45 / *SPECIAL SCREW 6X45*	T0206045		2

Nº	DESCRIPCION / *DESCRIPTION*	FSE 2003	Cant.
33	TORNILLO ESPECIAL 8X45 / *SPECIAL SCREW 8X45*	T0208045	1
34	DISTACIADOR SOP. GUIA CADENA GRANDE / *BIG CHAIN GUIDE SUPPORT SPACER*	BE25612021	1
35	SOPORTE GUIA CADENA / *CHAIN GUIDE SUPPORT*	BE25612018	1
36	DISTACIADOR SOP. GUIA CADENA PEQUEÑO / *SMALL CHAIN GUIDE SUPPORT SPACER*	BE25612020	1
37	SILENTBLOCK SOPORTE GUIA CADENA / *CHAIN GUIDE SUPPORT SILENBLOCK*	BE25612019	1
38	HEXAGONAL 8X20 / *HEX. BOLT 8X20*	T0108020	2
39	ARANDELA 8X16X1,5 / *WASHER 8X16X1.5*	T4008016	2
40	TENSOR RUEDA / *WHEEL TENSOR*	BE25818022	2
41	TUERCA CILINDRO ESPECIAL M10/150 / *M10/150 SPECIAL BOLT*	ME25616031	2
42	GOMA PROTECTOR BASCULANTE / *SWINGARM PROTECTOR RUBBER*	BE25836005	4
43	BASCULANTE / *SWINGARM*	BE250112002	1
44	JAULA AGUJAS HK2216 / *NEEDLES BEARING HK2216*	BE25614011	4
45	CASQUILLO BASCULANTE EC2003 / *EC2003 SWINGARM BUSHING*	BE250312007	2
46	ULS 5X12 / *ULS BOLT 5X12*	T0505012	4
47	SUJECCIÓN LATIGUILLO SOBRE BASCULANTE / *SWINGARM HOSE HOLDER*	BE25612006	2
48	ARANDELA 6X18X1,5 / *6X18X1.5 WASHER*	T4006018	2
49	ALLEN 6X75 / *ALLEN BOLT 6X75*	T0306075	1
50	PATIN CADENA / *CHAIN SLIDER*	BE250112015	1
51	ALLEN 6X45 / *ALLEN BOLT 6X45*	T0206045	2
52	ARANDELA PLANA 6X12X1,5 / *PLAIN WASHER 6X12X1.5*	T4006012	2
53	PROTECTOR PIÑON PLÁSTICO ENDURO / *ENDURO PLASTIC PINION PROT.*	ME250036121	1
54	PLATINA PROTECTOR PIÑON / *PINION PROTECTOR BRACKET*	ME25636021	1
55	RETEN 28X22X4 / *SEAL 28X22X4*	BE25610011	6
56	JAULA AGUJAS AL1216 / *AL 1216 NEEDLES BEARING*	BE25614009	1
57	CTO. TENSOR CADENA / *CHAIN TIGHTER SET*	BE25710078	1
58	CASQUILLO DISTANCIADOR PIÑÓN / *SPACER PINION BUSHING*	ME250036019	2
59	TORNILLO ESPECIAL M14X110 / *SPECIAL SCREW M14X110*	T0214110	1
60	BALANCIN COMPLETO EC / *EC ROCKER ARM SET*	BE25614005CT	1

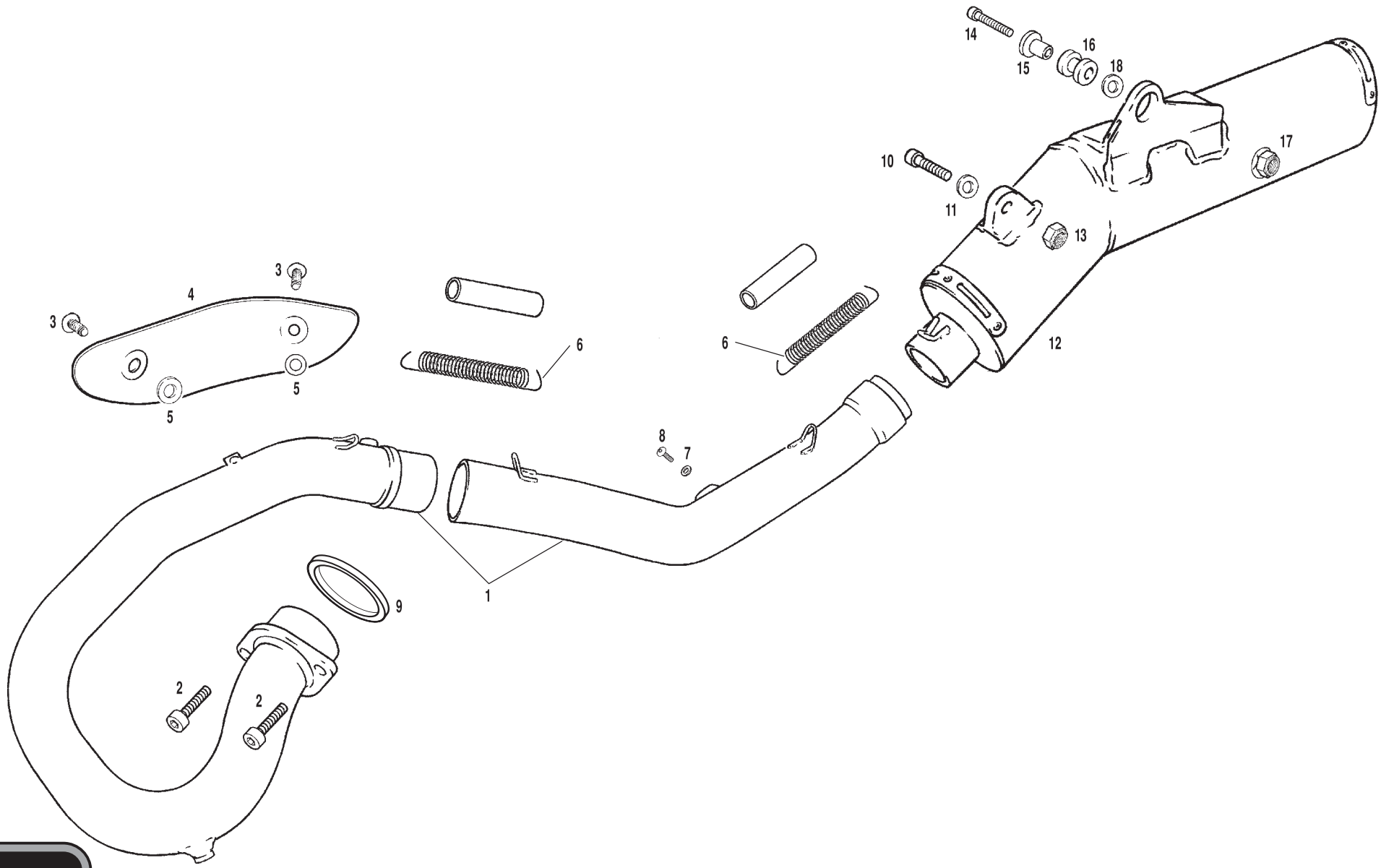
14
15
16
18
17
10
11
13
12
3
4
3
5
5
6
6
8
7
1
9
2
2

Nº	DESCRIPCION / *DESCRIPTION*	FSE 2003	Cant.
1	TUBO ESCAPE / *EXHAUST*	BFS400326001	1
2	ALLEN 8X20 / *8X20 ALLEN BOLT*	T0308020	2
3	ULS 6X10 / *6X10 ULS BOLT*	T0506010	2
4	PROTECTOR ESCAPE / *EXHAUST PROTECTOR*	BFS400126021	1
5	ARANDELA CLINGERIT 6x15x0.5 / *6x15x0.5 WASHER*	MFS400116407	2
6	MUELLE ESCAPE 4T / *FSE EXHAUST SPRING*	BFS400110042	1
7	ARANDELA 8X16X1,5 / *8X16X1,5 WASHER*	T4008016	1
8	ULS 8X16 / *8X16 ULS BOLT*	T0508016	1
9	JUNTA EC4T / *EXHAUST GASKET*	MFS400144012	1
10	ALLEN 8X25 / *8X25 ALLEN BOLT*	T0308025	1
11	ARANDELA 8X20X1,5 / *8X20X1,5 WASHER*	T4008020	1
12	SILENCIADOR TUBO ESCAPE / *EXHAUST SILENCER*	BFS400126002	1
13	TUERCA AUTOBLOCANTE M8 BAJA / *SELF-LOCKING NUT M8*	T2108001	1
14	ALLEN 8X50 / *8X50 ALLEN BOLT*	T0308050	1
15	CASQUILLO / *BUSHING*	BFS400126013	1
16	SILENTBLOCK / *SILENTBLOCK*	BE250026005	1
17	TUERCA CON ARANDELA / *NUT WITH WASHER*	T2208002	1
18	ARANDELA NEGRA / *BLACK WASHER*	BFS400126017	1

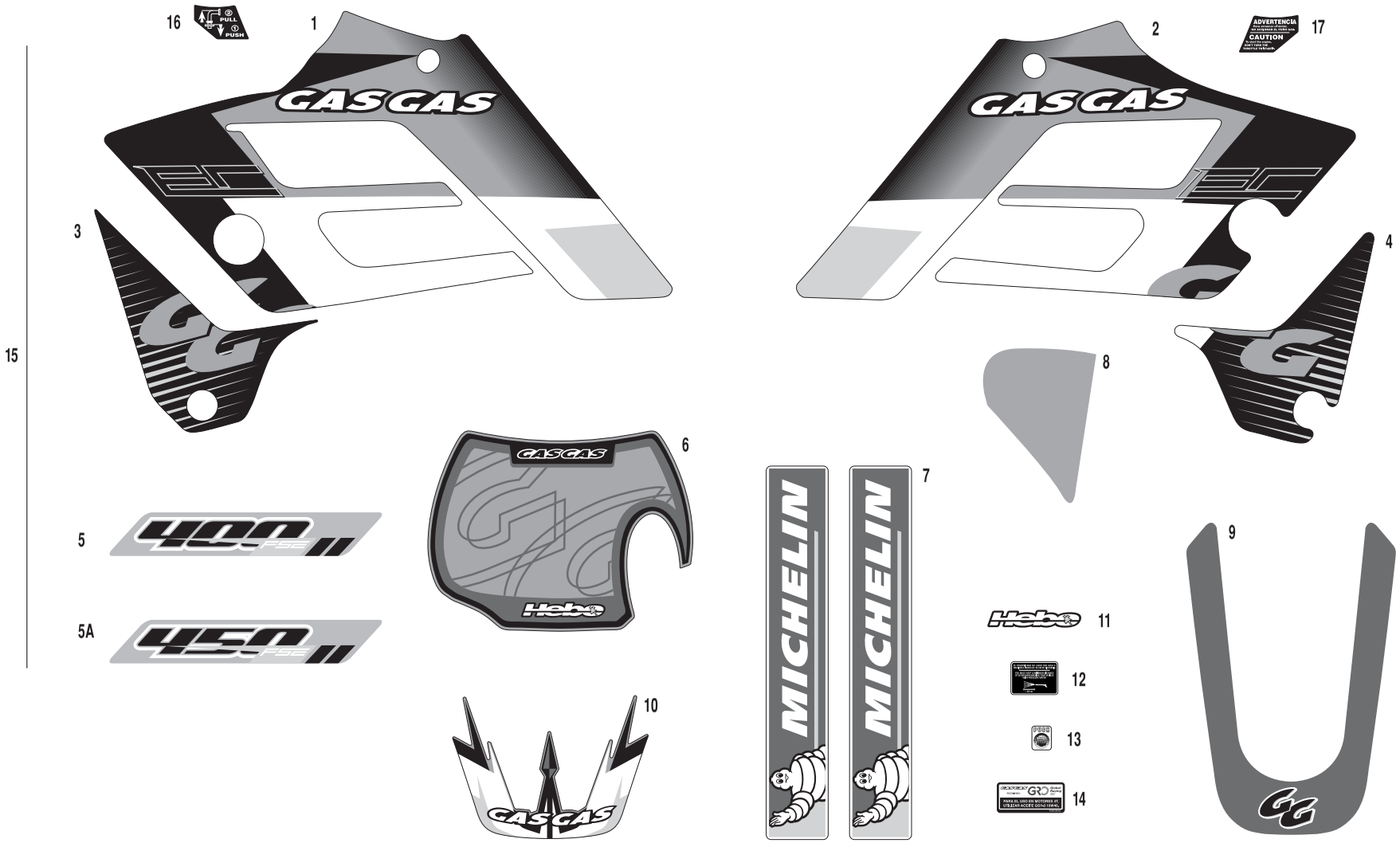
16
PULL
PUSH
1
GAS GAS
2
ADVERTENCIA
CAUTION
17
3
4
15
8
6
GAS GAS
Hebo
7
MICHELIN
MICHELIN
5
400
5A
450
9
10
GAS GAS
Hebo
11
12
13
14

Nº	DESCRIPCION / *DESCRIPTION*	FSE 2003	Cant.
1	ADH. TAPA LATERAL RAD. IZQ. / *LEFT SIDE RADIATOR COVER STICKER*	BFS400338052	1
2	ADH. TAPA LATERAL RAD. DER. / *RIGHT SIDE RADIATOR COVER STICKER*	BFS400338002	1
3	ADH. INF. RADIADOR IZQ. / *LEFT INFERIOR RADIATOR COVER STICKER*	BFS400338068	1
4	ADH. INF. RADIADOR DER. / *RIGHT INFERIOR RADIATOR COVER STICKER*	BFS400338067	1
5	ADH. FSE400 BASCULANTE / *FSE 400 SWINGARM STICKER*	BFS400338005	2
5A	ADH. FSE450 BASCULANTE / *FSE 450 SWINGARM STICKER*	BFS450338005	2
6	ADH. FARO DELANTERO / *FRONT LAMP STICKER*	BE250338001	1
7	ADH. MICHELIN HORQUILLA / *FRONT FORK MICHELIN STICKER*	PU000238006	2
8	ADH. TAPA FILTRO / *AIR FILTER COVER STICKER*	BE250138049	1
9	ADH. GUARDABARROS TRASERO / *REAR FENDER STICKER*	BE250338030	1
10	ADH. GUARDABARROS DELANTERO / *FRONT FENDER STICKER*	BE250338027	1
11	ADH. HEBO SILICONA / *HEBO SILICON STICKER*	PU000138016	1
12	ADH. LAVADO PRESIÓN / *PRESSURE WATER CLEAN STICKER*	PU000138009	1
13	ADH. “PUSH” TAPA FILTRO / *“PUSH” AIR FILTER COVER STICKER*	PU000138010	1
14	ADH. USO ACEITE GRO / *“GRO OIL USE ONLY” STICKER*	PU000338006	1
15	CTO. ADHESIVOS EC FSE-2003 / *EC FSE-2003 STICKERS SET*	BFS400338000	1
16	ADH. PUSH PULL 4T / *PUSH PULL 4T STICKER*	PU000338001	1
17	ADH. NO ACCIONAR EL GAS / *DON’T TWIST STICKER*	PU000238004	1

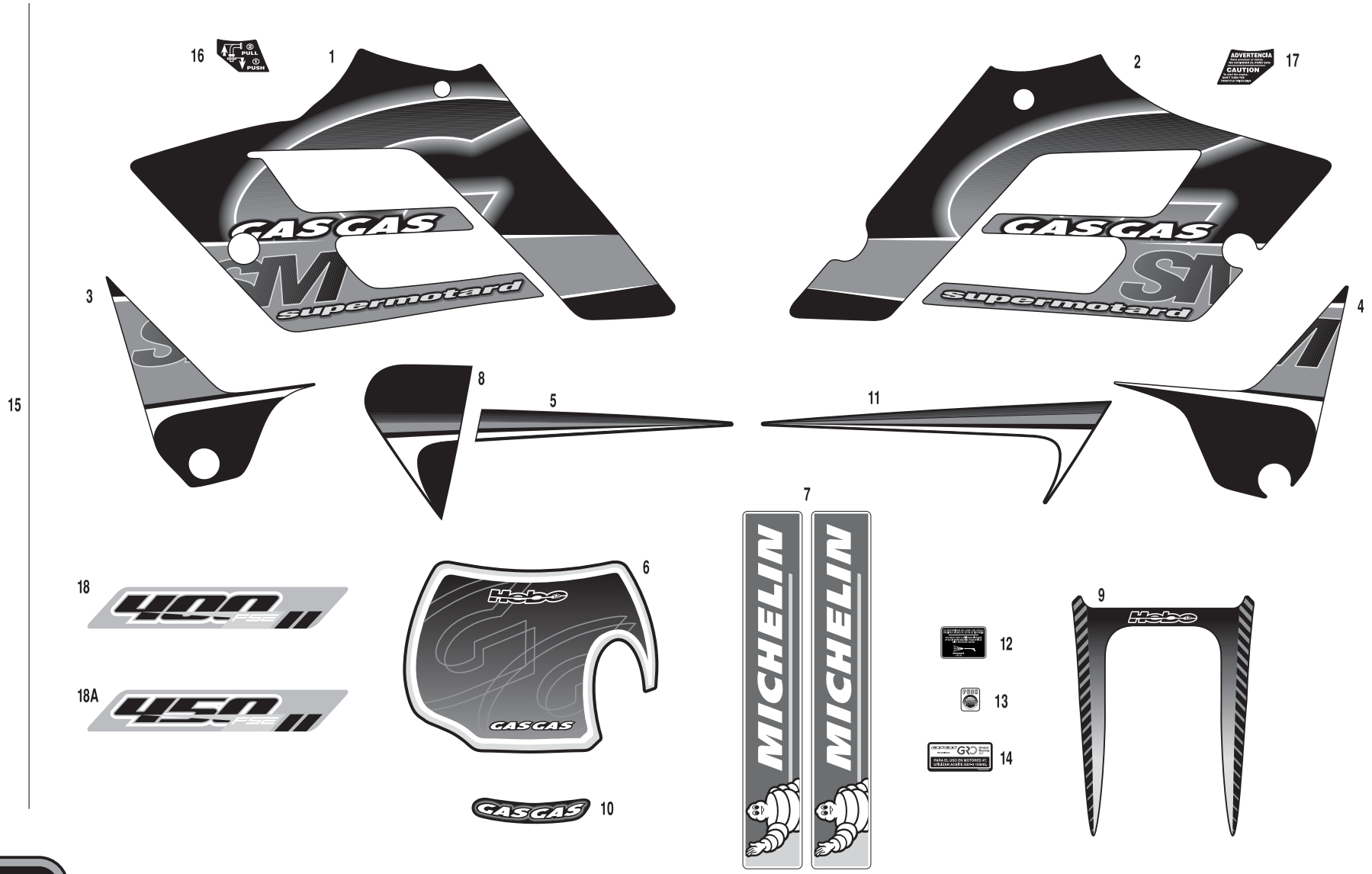
16
PULL
PUSH
1
GASGAS
SM
supermotard
2
ADVERTENCIA
CAUTION
17
GASGAS
SM
supermotard
3
4
15
8
5
11
7
MICHELIN
MICHELIN
18
450 FSE
18A
450 FSE
6
Hebo
GASGAS
12
13
14
9
Hebo
GASGAS
10

Nº	DESCRIPCION / *DESCRIPTION*	SM FSE 2003	Cant.
1	ADH. TAPA LATERAL RAD. IZQ. / *LEFT SIDE RADIATOR COVER STICKER*	BFS400238052SM	1
2	ADH. TAPA LATERAL RAD. DER. / *RIGHT SIDE RADIATOR COVER STICKER*	BFS400238002SM	1
3	ADH. INF. RADIADOR IZQ. / *LEFT INFERIOR RADIATOR COVER STICKER*	BFS400238068SM	1
4	ADH. INF. RADIADOR DER. / *RIGHT INFERIOR RADIATOR COVER STICKER*	BFS400238067SM	1
5	ADH. TAPA LATERAL IZQUIERDA / *LEFT LATERAL COVER STICKER*	BE250138004SM	1
6	ADH. FARO DELANTERO / *FRONT LAMP STICKER*	BE250138001SM	1
7	ADH. MICHELIN HORQUILLA / *FRONT FORK MICHELIN STICKER*	PU000238006	2
8	ADH. TAPA FILTRO / *AIR FILTER COVER STICKER*	BE250138049SM	1
9	ADH. GUARDABARROS TRASERO / *REAR FENDER STICKER*	BE250138030SM	1
10	ADH. GUARDABARROS DELANTERO / *FRONT FENDER STICKER*	BE250138027SM	1
11	ADH. TAPA PORTANUMEROS DERECHA / *RIGHT LATERAL COVER STICKER*	BE250138003SM	1
12	ADH. LAVADO PRESIÓN / *PRESSURE WATER CLEAN STICKER*	PU000138009	1
13	ADH. “PUSH” TAPA FILTRO / *“PUSH” AIR FILTER COVER STICKER*	PU000138010	1
14	ADH. USO ACEITE GRO / *“GRO OIL USE ONLY” STICKER*	PU000338006	1
15	CTO. ADHESIVOS SM FSE-2003 / *SM FSE-2003 STICKER SET*		1
16	ADH. PUSH PULL 4T / *PUSH PULL 4T STICKER*	PU000338001	1
17	ADH. NO ACCIONAR EL GAS / *DON’T TWIST STICKER*	PU000238004	1
18	ADH. FSE400 BASCULANTE / *FSE 400 SWINGARM STICKER*	BFS400338005	2
18A	ADH. FSE450 BASCULANTE / *FSE 450 SWINGARM STICKER*	BFS450338005	2

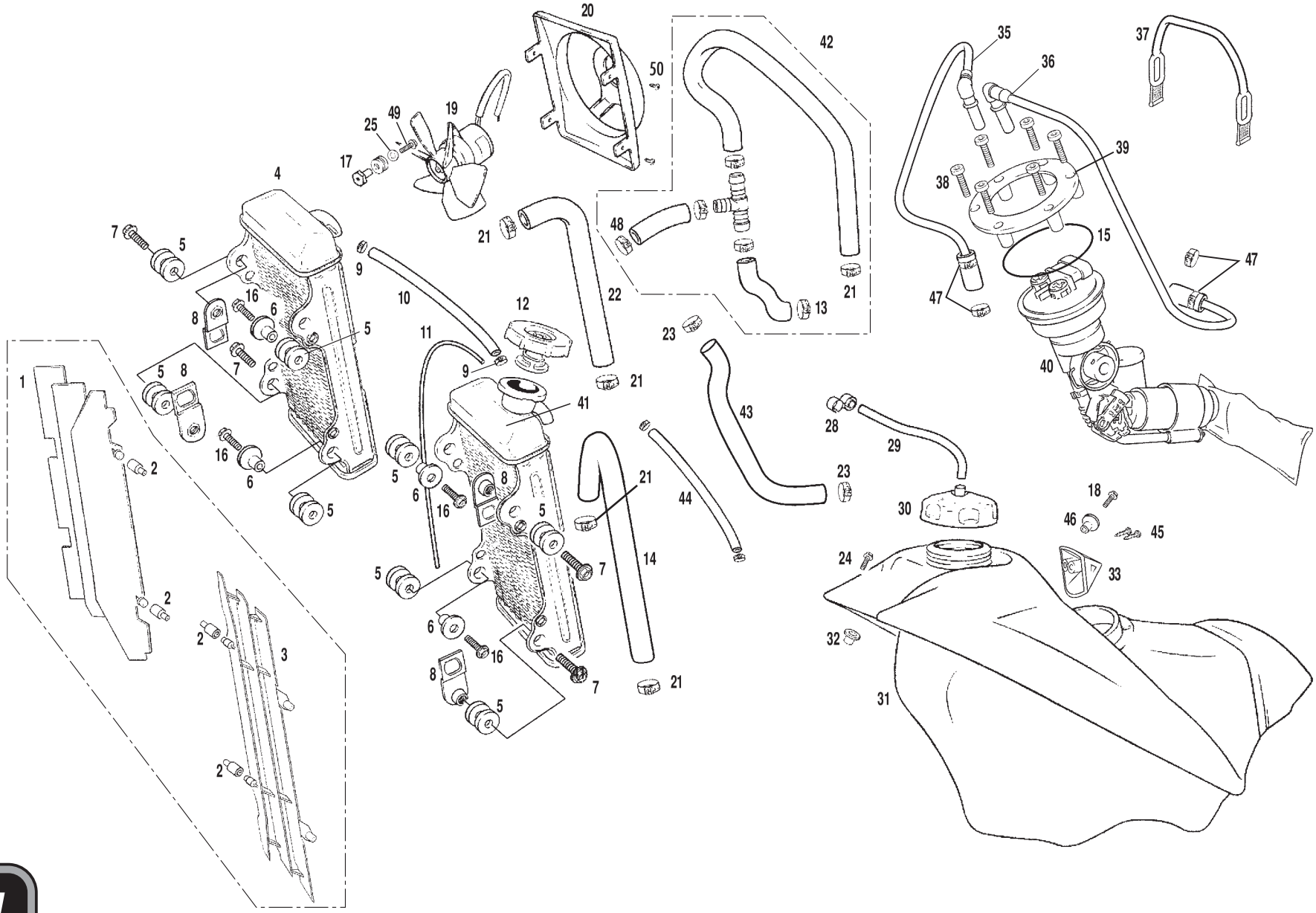
20
50
42
35
36
37
25
49
19
17
4
39
38
7
5
21
48
15
47
9
10
22
13
21
47
16
6
12
8
5
11
23
40
1
5
8
7
9
21
41
43
28
29
16
6
2
5
6
8
21
23
44
18
30
46
45
16
5
24
33
5
7
14
2
6
16
32
2
3
8
7
21
31
5
2

Nº	DESCRIPCION / *DESCRIPTION*	FSE 2003	Cant.
1	REJILLA RADIADOR DERECHO / *RIGHT RADIATOR RACK*	BE25620001	1
2	TOPE REJILLA RADIADOR / *RADIATOR RACK END*	BE25620101	4
3	REJILLA RADIADOR IZQUIERDO / *LEFT RADIATOR RACK*	BE25620002	1
4	RADIADOR DERECHO / *RIGHT RADIATOR*	BFS400132000	1
5	SILENTBLOCK RADIADOR / *RADIATOR SILENTBLOCK*	BE250026005	8
6	CASQUILLO RADIADOR / *RADIATOR BUSHING*	BE25832040	4
7	TORNILLO ESPECIAL 6X16 / *6X16 SPECIAL SCREW*	T0206016	4
8	PLASTICO LATERAL RADIADOR / *RADIATOR PROTECTOR*	BE25632015	4
9	ABRAZADERA COBRA 12/8 W4 CONDUCTO ACEITE / *OIL PIPE COBRA CLAMP*	MFS400110031	2
10	TUBO UNION RADIADORES / *RADIATOR CONNECTOR*	BFS400132008	1
11	TUBO SOBRANTE RADIADOR / *RADIATOR BREATHE HOSE*	BFS400110116	1
12	TAPON RADIADOR / *RADIATOR TAP*	BFS400132032	1
13	ABRAZADERA COBRA 25 / *25 CLAMP*	BE120132052	1
14	TUBO RADIADOR-CULATA SUPERIOR IZDO / *UPPER LEFT RAD. TO CYL. HEAD HOSE*	BFS400132002	1
15	TORICA BOMBA INYECCION / *INJECTION PUMP O'RING*	MFS400180105	1
16	ALLEN 6X20 / *6X20 ALLEN BOLT*	T0306020	4
17	CASQUILLO VENTILADOR / *FAN BUSHING*	L300016	3
18	ULS 5X16 / *5X16 ULS BOLT*	T0505016	1
19	VENTILADOR / *FAN*	L300001	1
20	PROTECTOR VENTILADOR / *FAN PROTECTOR*	L300011	1
21	ABRAZADERA COBRA 21 / *21 CLAMP*	L200046	4
22	TUBO RADIADOR-CULATA SUPERIOR DRCHO. / *UPPER RIGHT RAD. TO CYL. HEAD HOSE*	BFS400132012	1
23	ABRAZADERA 19 / *19 CLAMP*	L200043	2
24	TORNILLO ESPECIAL 6X20 / *6X20 SPECIAL SCREW*	T0206020	1
25	ARANDELA 4X12X1,5 / *4X12X1,5 WASHER*	T4004012	3
28	SOPORTE TUBO DESVAPORIZADOR / *STEAM HOSE HOLDER*	P720005	1
29	TUBO DESVAPORIZADOR TAPON GASOLINA / *FUEL HOSE TO PUMP*	BE25620011	1
30	TAPON DEPOSITO GASOLINA / *FUEL TANK CAP*	BE250020010	1
31	DEPOSITO / *FUEL TANK*	BFS400110024	1
32	CASQUILLO DEPOSITO / *FUEL TANK BUSHING*	BE250010007	1
33	SOPORTE ASIENTO DELANTERO / *FRONT SEAT SUPPORT*	BFS450310007	1
35	TUBO COMBUSTIBLE INYECCIÓN IZQUIERDO / *LEFT FUEL INJECTION HOSE*	MFS400180101	1

Nº	DESCRIPCION / *DESCRIPTION*	FSE 2003	Cant.
36	TUBO COMBUSTIBLE INYECCIÓN DERECHO / *RIGHT FUEL INJECTION HOSE*	MFS400180102	1
37	TIRA SUJ. DEPOSITO EC 2001 / *FUEL TANK RUBBER BAND HOLDER*	BE250136020	1
38	ALLEN 5X25 / *5X25 ALLEN BOLT*	T0305025	6
39	TAPA BOMBA INYECCION / *INJECTION PUMP COVER*	MFS400180106	1
40	BOMBA GASOLINA / *FUEL PUMP*	MFS400180100	1
41	RADIADOR IZQUIERDO / *LEFT RADIATOR*	BFS400132001	1
42	CTO. TUBOS RADIADOR A BOMBA AGUA / *RADIATOR TO WATER PUMP HOSE*	BFS400132020/2	1
43	TUBO DESVAPORIZADOR CULATA / *CYL. HEAD DESVAP. HOSE*	MFS400116103	1
44	TUBO DESVAPORIZADOR CHASIS EC400-4T / *FRAME DESVAP. HOSE*	BFS400132019	1
45	ALLEN 5X15 / *5X15 ALLEN BOLT*	T0305015	2
46	CASQUILLO INFERIOR SUJECCIÓN RADIADOR / *INFERIOR RADIATOR BUSHING*	BE25832040	1
47	ABRAZADERA D.12.9-13.6 AMARILLA / *12.9-13.6 YELLOW CLAMP*	BE250210047	4
48	ABRAZADERA 22 / *22 CLAMP*	L200038	1
49	TORNILLO HEXAGONAL 4X10 / *4X10 HEXAGONAL BOLT*	T0104010	3
50	TORNILLO ROSCA-CHAPA 3X9 / *3X9 SCREW*	T1003009	4

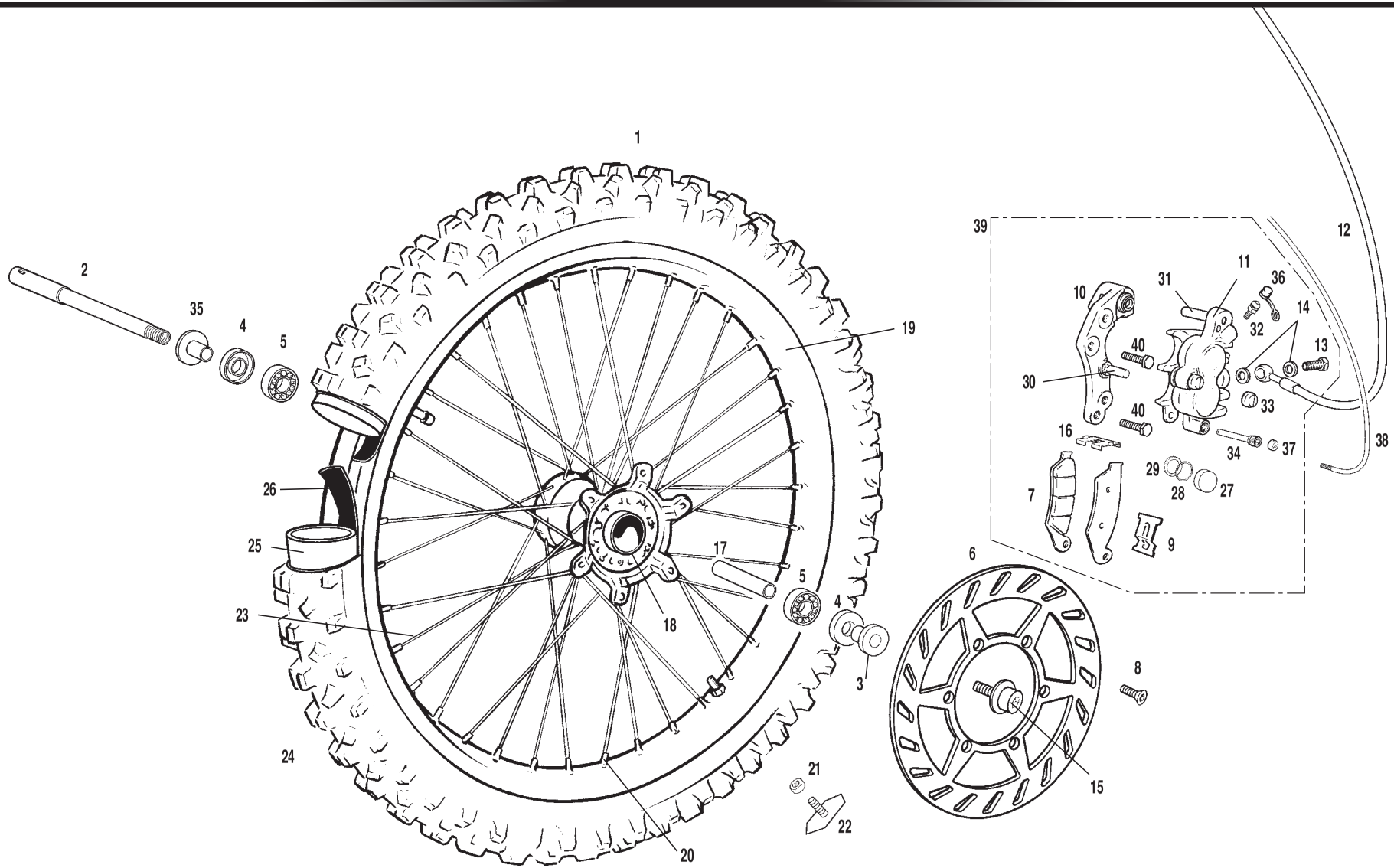
1
2
35
4
5
19
26
25
23
24
17
18
20
21
22
3
6
8
15
39
12
11
31
36
10
14
32
13
40
30
33
40
16
34
37
38
29
28
27
7
9

Nº	DESCRIPCION / *DESCRIPTION*	FSE 2003	Cant.
1	RUEDA DELANTERA EC250-2003 / *EC250-2003 FRONT WHEEL*	BE250318000	1
2	EJE RUEDA DELANTERA / *FRONT WHEEL AXIS*	BC250018017	1
3	DISTANCIADOR RUEDA DELANTERA LARGO / *LONG FRONT WHEEL SPACER*	BC250018018	1
4	RETEN RUEDA DELANTERA / *FRONT WHEEL GASKET*	C160710	2
5	COJINETE / *BEARING*	C160001	2
6	DISCO FRENO DELANTERO / *FRONT BRAKE DISC*	BE250222011	1
7	PASTILLAS DE FRENO DELANTERO / *FRONT BRAKE PADS*	BE250022065	1
8	HEXAGONAL 6X14 / *HEXAGONAL BOLT 6X14*	T020601412	6
9	PLATINA (A) SUJ. PASTILLAS DEL. / *FRONT BRAKE PADS HOLDER BRACKET (A)*	BE250022063	1
10	SOPORTE PINZA DELANTERO / *FRONT CALIPER SUPPORT*	BE250022110	1
11	PINZA FRENO DELANT. SOP. EC-2003 / *FRONT BRAKE CALIPER WITH SUPPORT*	BE250322000	1
12	LATIGUILLO FRENO DELANTERO / *FRONT BRAKE HOSE*	BE250022002	1
13	RACORD SUJECCIÓN LATIGUILLO 10X1,25 / *HOSE HOLDER RACORD 10X1.25*	BC25722006	1
14	ARANDELA LATIGUILLO 10X14X2 / *HOSE WASHER 10X14X2*	BE25622057	2
15	TORNILLO EJE RUEDA DELANTERA / *FRONT WHEEL AXIS BOLT*	BE250218026	1
16	PLAT. (B) SUJ. PASTILLAS DELANT. / *FRONT BRAKE PADS HOLDER BRACKET (B)*	BE250022064	1
17	DISTANCIADOR / *SPACER*	R170700	1
18	CUBO RUEDA DELANTERA SEP. INT. ALUMINIO / *FRONT WHEEL HUB*	BC250018007	1
19	LLANTA 1,60X21 / *RIM 1.60X21*	BE250118006	1
20	TUERCA RADIO DELANTERO / *FRONT SPOKE NUT*	BE250218010	36
21	TUERCA CON ARANDELA ESTRIADA M8 / *NUT WITH LOCK WASHER M8*	BE25818060	1
22	AGARRE CUBIERTA DELANTERO / *FRONT TIRE HOLDER*	R120000	1
23	RADIO DELANTERO 243X3,5 / *FRONT SPOKE 243X3.5*	BE250218009	36
24	NEUMÁTICO DELANTERO 90/90-21 / *FRONT TIRE 90/90-21*	BE25618102	1
25	CÁMARA DELANTERA / *FRONT AIR HOSE*	BE25618001	1
26	PROTECTOR BANDA DELANTERA / *FRONT RIM BAND*	BE25618028	1
27	PISTÓN COMPLETO PINZA FRENO DELANTERO / *FRONT BRAKE CALIPER PISTON*	BE250022042	2
28	TORICA PISTÓN PINZA FRENO DELANT. / *FRONT BRAKE CALIPER PISTON O'RING*	BE250022032	2
29	RETÉN PINZA FRENO DELANTERA / *FRONT BRAKE CALIPER SEAL*	BE250022033	2
30	TORNILLO CLAVIJA PINZA FRENO DELANTERA / *FRONT BRAKE CALIPER BOLT*	BE250022034	1
31	TORNILLO CLAVIJA A PINZA FRENO DELANTERA / *FRONT BRAKE CALIPER "A BOLT*	BE250022043	1
32	SANGRADOR PINZA FRENO DELANTERA / *FRONT BRAKE CALIPER BLEEDER*	BE250022038	1

Nº	DESCRIPCION / *DESCRIPTION*	FSE 2003	Cant.
33	PROTEC. TOR. PINZA FRENO DELANTERA / *FRONT BRAKE CALIPER BOLT PROT.*	BE250022039	1
34	PASADOR PASTILLAS PINZA FRENO DELANTERA / *FRONT BRAKE PADS PIN*	BE250022041	1
35	DISTANCIADOR RUEDA DELANTERA / *FRONT WHEEL SPACER*	BC250018019	1
36	TAPÓN SANGRADOR / *BLEEDER CAP*	BE250022055	1
37	PROTECCIÓN PASADOR NISSIN / *NISSIN PROTECTOR PIN*	BE250022095	1
38	CTO. SOPORTE CON IMAN C.K. / *SUPPORT WITH C.K. MAGNET SET*	BE250334008	1
39	CTO. FRENO DELANTERO PURGADO EC 2003 / *FRONT BRAKE SET*	BE250322108	1
40	TORNILLO ESPECIAL 8X30 / *8X30 SPECIAL SCREW*	T0208030	2

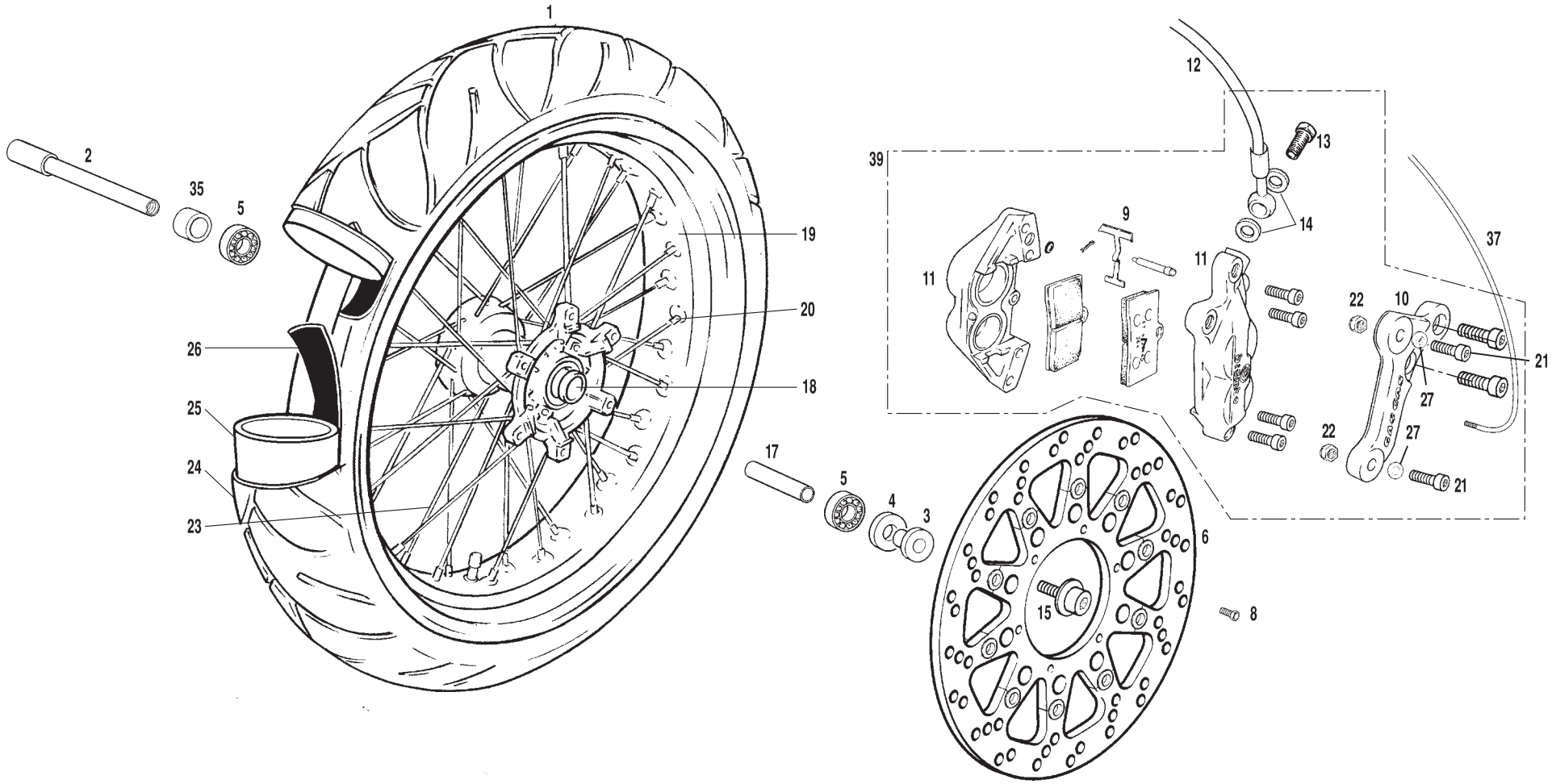
1
2
35
5
19
20
26
18
25
24
23
17
5
4
3
6
15
8
39
9
11
11
12
13
14
37
22
10
21
27
22
27
21

Nº	DESCRIPCION / *DESCRIPTION*	SM FSE 2003	Cant.
1	RUEDA DELANTERA EC SM / *EC SM FRONT WHEEL*	BE250118000SM	1
2	EJE RUEDA DELANTERA / *FRONT WHEEL AXIS*	BC250018017	1
3	DISTANCIADOR RUEDA DELANTERA LARGO / *LONG FRONT WHEEL SPACER*	BC250018018	1
4	RETEN RUEDA DELANTERA / *FRONT WHEEL GASKET*	C160710	2
5	COJINETE / *BEARING*	C160001	2
6	DISCO FRENO DELANTERO / *FRONT BRAKE DISC*	BE250122011SM	1
7	PASTILLAS DE FRENO DELANTERO / *FRONT BRAKE PADS*	BE250122065SM	1
8	HEXAGONAL 6X14 / *HEXAGONAL BOLT 6X14*	T020601412	6
9	PLATINA (A) SUJ. PASTILLAS DEL. / *FRONT BRAKE PADS HOLDER BRACKET (A)*	BE250022063	1
10	SOPORTE PINZA DELANTERO / *FRONT CALIPER SUPPORT*	BE250122110SM	1
11	PINZA FRENO DELANTERO / *FRONT BRAKE CALIPER*	BE250122000SM	1
12	LATIGUILLO FRENO DELANTERO / *FRONT BRAKE HOSE*	BE250122002SM	1
13	RACORD SUJECCIÓN LATIGUILLO 10X1,25 / *HOSE HOLDER RACORD 10X1.25*	BC25722006	1
14	ARANDELA LATIGUILLO 10X14X2 / *HOSE WASHER 10X14X2*	BE25622057	2
15	TORNILLO EJE RUEDA DELANTERA / *FRONT WHEEL AXIS BOLT*	BE250218026	1
17	DISTANCIADOR / *SPACER*	R170700	1
18	CUBO RUEDA DELANTERA SEP. INT. ALUMINIO / *FRONT WHEEL HUB*	BC250018007	1
19	LLANTA / *RIM*	BE250118006SM	1
20	TUERCA RADIO DELANTERO / *FRONT SPOKE NUT*	BT27718016	36
21	TORNILLO ESPECIAL 8X45 / *8X45 SPECIAL SCREW*	T0208045	2
22	TUERCA M8 AUTOBLOCANTE CON ARANDELA / *M8 SLF-LOCKING NUT WITH WASHER*	T2208002	2
23	RADIO DELANTERO 185X3,5 / *FRONT SPOKE 185X3.5*	BE250118009SM	36
24	NEUMÁTICO DELANTERO 120/60 ZR 17 / *FRONT TIRE*	BE2501180102SM	1
25	CÁMARA DELANTERA SUPERMOTARD / *SUPERMOTARD FRONT AIR HOSE*	BE250118001SM/2	1
26	PROTECTOR BANDA DELANTERA / *FRONT RIM BAND*	BE250118028SM	1
27	ARANDELA 8X20X1,5 / *8X20X1,5 WASHER*	T4008020	2
35	DISTANCIADOR RUEDA DELANTERA / *FRONT WHEEL SPACER*	BC250018019	1
37	CABLE MULTIFUNCION TT 2003 / *MULTIFUNCTION CABLE*	BE250334050	1
38	CTO. SOPORTE CON IMAN C.K. / *SUPPORT WITH C.K. MAGNET SET*	BE250334008	1
39	CTO. FRENO DELANTERO PURGADO EC 2003 / *FRONT BRAKE SET*	BE250322108C	1

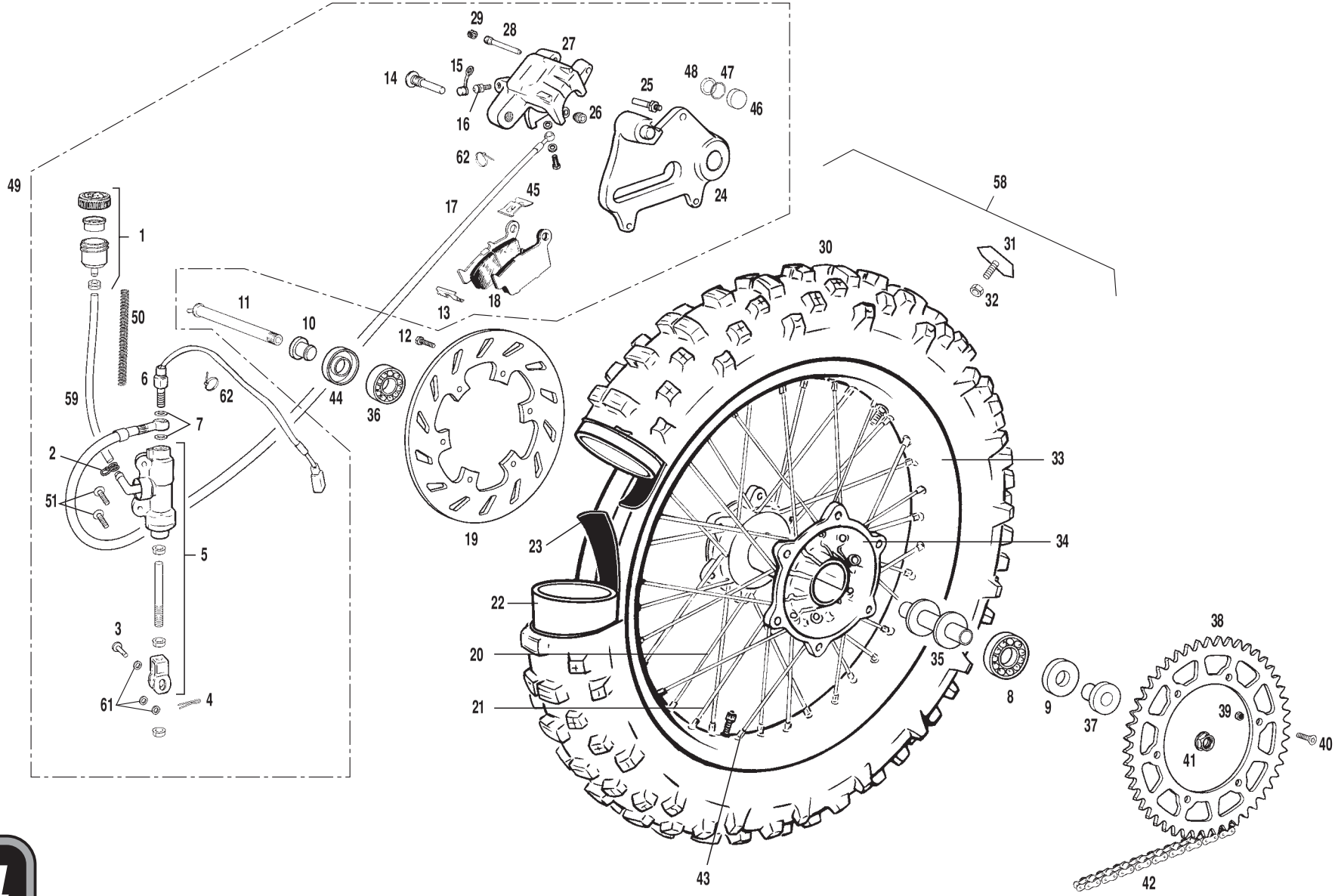
29
28
27
14
15
16
26
25
48
47
46
62
24
45
17
49
1
58
30
31
32
18
13
11
10
12
50
6
62
44
36
59
7
2
51
33
19
23
34
5
22
3
20
35
8
9
37
38
39
40
41
61
4
21
43
42

Nº	DESCRIPCION / *DESCRIPTION*	FSE 2003	Cant.
1	DEPÓSITO LÍQUIDO DE FRENOS / *BRAKE FLUID TANK*	BE25610016	1
2	ABRAZADERA MUELLE M-11.6X12.03 02016098 ROSA / *M-11.6 SPRING CLAMP*	BE25610044/2	1
3	PASADOR 8X20 PEDAL FRENO / *BRAKE PEDAL PIN 8X20*	BE25622026	1
4	CLAVILLA PASADOR FRENO 2X20 / *2X20 BRAKE PEDAL PIN STOPPER*	BE25622027	1
5	BOMBA FRENO TRASERO NISSIN R2MRC019 / *NISSIN REAR BRAKE PUMP*	BE25622010/2	1
6	INTERRUPTOR 23.024/1 STOP BOMBA NISSIN / *NISSIN BRAKE PUMP STOP SWITCH*	BE250034003/2	1
7	ARANDELA LATIGUILLO 10X14X1 / *10X14X1 HOSE WASHER*	BE25622007	4
8	RODAMIENTO 6205 2RSR / *BUSHING 6205 2RSR*	C180700	1
9	RETEN RUEDA TRASERA / *REAR WHEEL SEAL*	C180710	1
10	DISTANCIADOR RUEDA TRASERA CORTO / *SHORT REAR WHEEL SPACER*	BE250018025	1
11	EJE RUEDA TRASERA / *REAR WHEEL AXIS*	BE25618020	1
12	HEXAGONAL 6X16 DISCO TRASERO / *6X16 REAR DISC BRAKE HEX. SCREW*	BE25618032	6
13	PLATINA (A) SUJ. PASTILLAS TRAS. / *REAR BRAKE PADS HOLDER (A) BRACKET*	BE250022090	1
14	TORNILLO SUJECCIÓN PINZA / *CALIPER HOLDER SCREW*	BE250022096	1
15	TAPÓN SANGRADOR / *BLEEDER CAP*	BE250022055	1
16	SANGRADOR / *BLEEDER*	BE250022060	1
17	LATIGUILLO FRENO TRASERO NISSIN / *NISSIN REAR BRAKE HOSE*	BE250022004	1
18	PASTILLAS DE FRENO TRAS. / *REAR BRAKE PADS*	BE250022068	1
19	DISCO FRENO TRASERO / *REAR BRAKE DISC*	BE250322012	1
20	RADIO 192X4,5 LADO FRENO 18” / *18” BRAKE-SIDE SPOKE 192X4.5*	BE250018015	18
21	RADIO 188X4,5 LADO CORONA 18” / *18” SPROCKET-SIDE SPOKE 188X4.5*	BE250018014	18
22	CAMARA TRASERA 18 CR / *REAR AIR HOSE 18 CR*	BE25618004	1
23	PROTECTOR BANDA TRASERA 18 / *18 REAR RIM BAND*	BE25618003	1
24	SOPORTE PINZA TRASERA / *REAR CALIPER SUPPORT*	BE250022120	1
25	TORNILLO GUIA / *GUIDE SCREW*	BE250022092	1
26	GUARDAPOLVO / *DUST COVER*	BE250022093	1
27	PINZA FRENO TRASERO CON SOPORTE EC-2003 / *REAR BRAKE CALIPER*	BE250322001	1
28	PASADOR PASTILLAS / *BRAKE PADS PIN*	BE250022094	1
29	PROTECIÓN PASADOR / *PIN PROTECTION*	BE250022095	1
30	NEUMÁTICO TRASERO 140/80-18 / *140/80-18 REAR TYRE*	BE25618005	1
31	AGARRE CUBIERTA TRASERA / *REAR TYRE HOLDER*	BE250218008	1
32	TUERCA CON ARANDELA ESTRIADA M-8 / *M8 NUT WITH LOCK WASHER*	BE25818060	1

Nº	DESCRIPCION / *DESCRIPTION*	FSE 2003	Cant.
33	LLANTA 2.15X18 / *2.15X18 RIM*	BE250118011	1
34	CUBO RUEDA TRASERA / *REAR WHEEL HUB*	BC25718027	1
35	DISTAN. RUEDA TRAS. INTE. ALUMINIO / *ALUMINIUM REAR WHEEL SPACER*	R575700	1
36	COJINETE 6004 2RSR / *6004 2RSR BEARING*	C160001	1
37	DISTANCIADOR RUEDA TRASERA LARGO / *LONG WHEEL SPACER*	BE250318021	1
38	CORONA Z-48 / *Z-48 SPROCKET*	BE25618034	1
39	TUERCA AUTOBL. M-8 ALTA CORONA / *M8 HIGH SELF-LOCKING SPROCKET NUT*	BE25618031	6
40	ALLEN CÓNICO 8X30 / *8X30 CONIC ALLEN BOLT*	BE25618030	6
41	TUERCA AUTOBLOC. RUEDA TRASERA / *REAR WHEEL SELF-LOCKING NUT*	BE25618023	1
42	CADENA 135 ORCX112 PASOS ENDURO 2003 / *135ORCX112 CHAIN EC2003*	BE250310036	1
43	TUERCA RADIO TRASERA / *REAR SPOKE NUT*	BE250018016	36
44	RETEN / *SEAL*	C160710	1
45	PLATINA (B) SUJECCIÓN PAST. TRASERA / *REAR BRAKE PADS HOLDER BRACKET (B)*	BE250022091	1
46	PISTÓN PINZA FRENO TRASERA / *REAR BRAKE CALIPER PISTON*	BE250022044	1
47	TORICA PISTÓN PINZA FRENO TRASERA / *REAR BRAKE CALIPER PISTON O'RING*	BE250022047	1
48	RETÉN PISTÓN PINZA FRENO TRASERA / *REAR BRAKE CALIPER PISTON SEAL*	BE250022048	1
49	CTO. FRENO TRASERO PURGADO FSE 2003 / *REAR BRAKE SET*	BFS400322118	1
50	MUELLE DESVAPORIZADOR / *BREATHE SPRING*	M150000/2	1
51	TORNILLO ULS 6X16 / *6X16 ULS BOLT*	T0506016	2
58	RUEDA TRASERA EC250-2003 / *EC250-2003 REAR WHEEL SET*	BE250318100	1
59	TUBO LIQUIDO FRENO / *BRAKE FLUID TUBE*	BFS400110116	1
61	ARANDELA 8X16X1 / *8X16X1 WASHER*	T4008018	3
62	BRIDA UNEX CORTA 2,5X98 / *2,5X98 SHORT CLAMP*	BE25634010	2

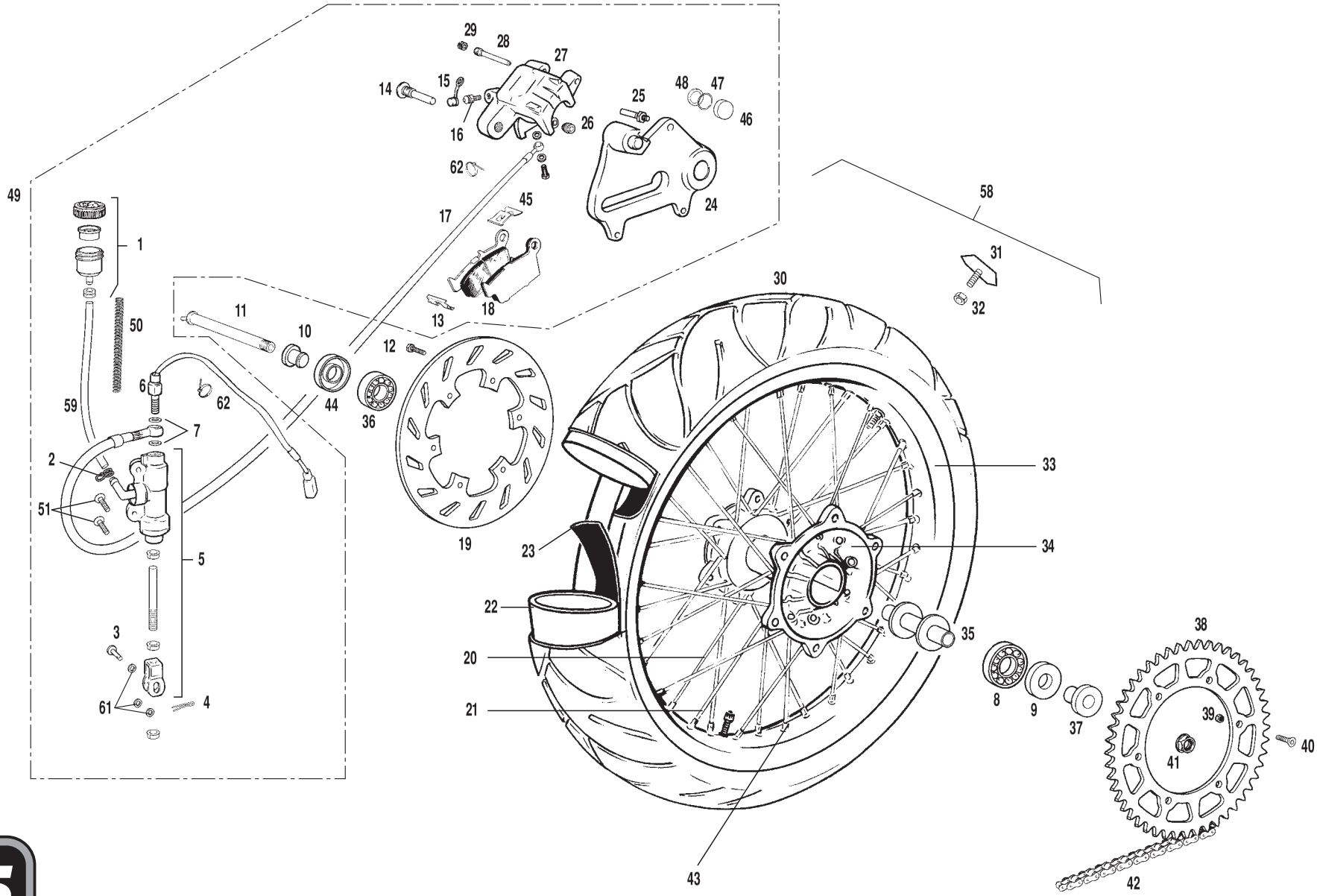
29
28
27
14
15
16
26
25
48
47
46
62
24
45
17
18
13
49
1
50
11
10
12
6
62
44
36
59
7
2
51
5
3
61
4
19
23
22
20
21
43
30
58
31
32
33
34
35
8
9
37
38
39
40
41
42

Nº	DESCRIPCION / *DESCRIPTION*	SM-FSE 2003	Cant.
1	DEPÓSITO LÍQUIDO DE FRENOS / *BRAKE FLUID TANK*	BE250110016SM	1
2	ABRAZADERA MUELLE M-11.6X12.03 02016098 ROSA / *M-11.6 SPRING CLAMP*	BE25610044/2	1
3	PASADOR 8X20 PEDAL FRENO / *BRAKE PEDAL PIN 8X20*	BE25622026	1
4	CLAVILLA PASADOR FRENO 2X20 / *2X20 BRAKE PEDAL PIN STOPPER*	BE25622027	1
5	BOMBA FRENO TRASERO NISSIN R2MRC019 / *NISSIN REAR BRAKE PUMP*	BE25622010/2	1
6	INTERRUPTOR 23.024/1 STOP BOMBA NISSIN / *NISSIN BRAKE PUMP STOP SWITCH*	BE250034003/2	1
7	ARANDELA LATIGUILLO 10X14X1 / *10X14X1 HOSE WASHER*	BE25622007	4
8	RODAMIENTO 6205 2RSR / *BUSHING 6205 2RSR*	C180700	1
9	RETEN RUEDA TRASERA / *REAR WHEEL SEAL*	C180710	1
10	DISTANCIADOR RUEDA TRASERA CORTO / *SHORT REAR WHEEL SPACER*	BE250018025	1
11	EJE RUEDA TRASERA / *REAR WHEEL AXIS*	BE25618020	1
12	HEXAGONAL 6X16 DISCO TRASERO / *6X16 REAR DISC BRAKE HEX. SCREW*	BE25618032	6
13	PLATINA (A) SUJ. PASTILLAS TRAS. / *REAR BRAKE PADS HOLDER (A) BRACKET*	BE250022090	1
14	TORNILLO SUJECCIÓN PINZA / *CALIPER HOLDER SCREW*	BE250022096	1
15	TAPÓN SANGRADOR / *BLEEDER CAP*	BE250022055	1
16	SANGRADOR / *BLEEDER*	BE250022060	1
17	LATIGUILLO FRENO TRASERO NISSIN / *NISSIN REAR BRAKE HOSE*	BE250022004	1
18	PASTILLAS DE FRENO TRAS. / *REAR BRAKE PADS*	BE250022068	1
19	DISCO FRENO TRASERO / *REAR BRAKE DISC*	BE250222012	1
20	RADIO 170X4 LADO FRENO / *BRAKE-SIDE SPOKE 170X4*	BE250118015SM	18
21	RADIO 168X4 LADO CORONA / *SPROCKET-SIDE SPOKE 168X4*	BE250118014SM	18
22	CAMARA TRASERA 17 CG / *REAR AIR HOSE 17 CG*	BE250118004SM	1
23	PROTECTOR BANDA TRASERA 18 / *18 REAR RIM BAND*	BE250118028SM	1
24	SOPORTE PINZA TRASERA / *REAR CALIPER SUPPORT*	BE250022120	1
25	TORNILLO GUIA / *GUIDE SCREW*	BE250022092	1
26	GUARDAPOLVO / *DUST COVER*	BE250022093	1
27	PINZA FRENO TRASERO CON SOPORTE EC-2003 / *REAR BRAKE CALIPER*	BE250322001	1
28	PASADOR PASTILLAS / *BRAKE PADS PIN*	BE250022094	1
29	PROTECIÓN PASADOR / *PIN PROTECTION*	BE250022095	1
30	NEUMÁTICO TRASERO 150/60 ZR17 / *150/60 ZR17 REAR TYRE*	BE250118005SM	1
31	AGARRE CUBIERTA TRASERA / *REAR TYRE HOLDER*	BE250218008	1
32	TUERCA CON ARANDELA ESTRIADA M-8 / *M8 NUT WITH LOCK WASHER*	BE25818060	1

Nº	DESCRIPCION / *DESCRIPTION*	SM-FSE 2003	Cant.
33	LLANTA 2.15X18 / *2.15X18 RIM*	BE250118011	1
34	CUBO RUEDA TRASERA / *REAR WHEEL HUB*	BC25718027	1
35	DISTAN. RUEDA TRAS. INTE. ALUMINIO / *ALUMINIUM REAR WHEEL SPACER*	R575700	1
36	COJINETE 6004 2RSR / *6004 2RSR BEARING*	C160001	1
37	DISTANCIADOR RUEDA TRASERA LARGO / *LONG WHEEL SPACER*	BE250318021	1
38	CORONA Z-42 / *Z-42 SPROCKET*	BE250118034SM	1
39	TUERCA AUTOBL. M-8 ALTA CORONA / *M8 HIGH SELF-LOCKING SPROCKET NUT*	BE25618031	6
40	ALLEN CÓNICO 8X30 / *8X30 CONIC ALLEN BOLT*	BE25618030	6
41	TUERCA AUTOBLOC. RUEDA TRASERA / *REAR WHEEL SELF-LOCKING NUT*	BE25618023	1
42	CADENA / *CHAIN*	BE250110036SM	1
43	TUERCA RADIO TRASERA / *REAR SPOKE NUT*	BE250118016SM	36
44	RETEN / *SEAL*	C160710	1
45	PLATINA (B) SUJECCIÓN PAST. TRASERA / *REAR BRAKE PADS HOLDER BRACKET (B)*	BE250022091	1
46	PISTÓN PINZA FRENO TRASERA / *REAR BRAKE CALIPER PISTON*	BE250022044	1
47	TORICA PISTÓN PINZA FRENO TRASERA / *REAR BRAKE CALIPER PISTON O'RING*	BE250022047	1
48	RETÉN PISTÓN PINZA FRENO TRASERA / *REAR BRAKE CALIPER PISTON SEAL*	BE250022048	1
49	CTO. FRENO TRASERO PURGADO FSE 2003 / *REAR BRAKE SET*	BFS400322118C	1
50	MUELLE DESVAPORIZADOR / *BREATHE SPRING*	M150000/2	1
51	TORNILLO ULS 6X16 / *6X16 ULS BOLT*	T0506016	2
58	RUEDA TRASERA SM FSE / *SM FSE REAR WHEEL SET*	BE250118100SM	1
59	TUBO LIQUIDO FRENO / *BRAKE FLUID TUBE*	BE250010116	1
61	ARANDELA 8X16X1 / *8X16X1 WASHER*	T4008018	3
62	BRIDA UNEX CORTA 2,5X98 / *2,5X98 SHORT CLAMP*	BE25634010	2

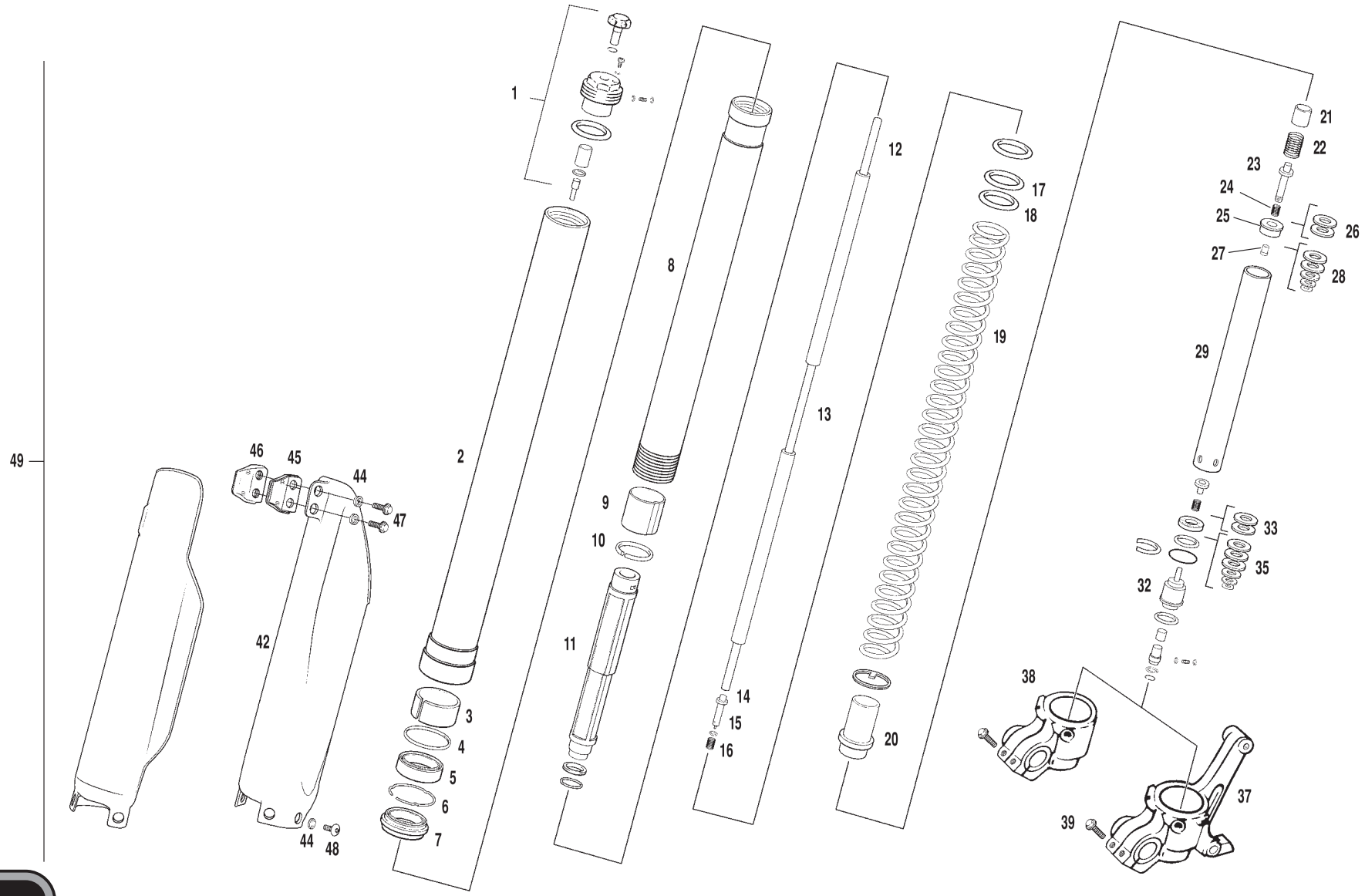
1
2
3
4
5
6
7
8
9
10
11
12
13
14
15
16
17
18
19
20
21
22
23
24
25
26
27
28
29
32
33
35
37
38
39
42
44
45
46
47
48
49

Nº	DESCRIPCION / *DESCRIPTION*	FSE 2003	Cant.
1	CTO. TAPÓN BOTELLA M51X1,5 / *OUTER TUBE CAP SET M51X1.5*	BC250014102	2
2	BARRA SUSPENSIÓN D. 54/57 / *INNER TUBE 54/57*	BC250014110	2
3	GLACIER BOTELLA D. 47X43X20 / *OUTER TUBE GLACIER 47X43X20*	BC250014134	2
4	ANILLO CIERRE D. 45 / *CLOSER RING 45*	BC250014133	2
5	RETEN SUSPENSION D. 43X53. 15X9,5 / *FORK SEAL 43X53 15X9.5*	BC250014212	2
6	CLIP SB53 / *SB53 CLIP*	BC250014182	2
7	GUARDAPOLVO SUSPENSIÓN D. 43 / *DUST COVER D-43*	BC250014131	2
8	TUBO BOTELLA D. 43 / *OUTER TUBE 43*	BC250014206	2
9	GLACIER BARRA D. 43,8X43X20 / *INNER TUBE GLACIER 43.8X42X20*	BC250014111	2
10	SEEGER D. 53 / *SEEGER D. 53*	BC250014224	2
11	RETENEDOR L200 D. 27,5 CPL / *RETAINER*	BC250014220	2
12	VARILLA L512 / *PIN*	BC250014116	2
13	PISTÓN D. 14 M11X1 L546 / *PISTON*	BC250014178	2
14	EJE RECUPERACIÓN / *AXIS*	BC250014218	2
15	TORICA NBR. 3X1,5 / *O'RING*	BC250014172	2
16	MUELLE HIDRÁULICO / *HYDRAULIC SPRING*	BC250014173	2
17A	DISTANCIADOR 42X26,5X2,5 / *SPACER 42X26,5X2,5*	BC250014184	2
17B	DISTANCIADOR 42X26,5X5 / *SPACER 42X26,5X10*	BC250014222	2
17C	DISTANCIADOR 42X26,5X10 / *SPACER 42X26,5X10*	BC250014223	2
18	ARO D. 26,5X42X1,5 / *WASHER 26,5X42X1,5*	BC250014221	2
19	JUEGO MUELLE BOTELLA / *BOTTLE SPRING SET*	BC250014108	2
20	TORNILLO APRIETE M29,3X1 / *FIXING BOLT*	BC250014219	2
21	DISTANCIADOR D. 26,2X38,5X3 / *SPACER*	BC250014128	2
22	MUELLE REBOTE D.14,6 L22 / *REBOUND SPRING*	BC250014194	2
23	PISTÓN / *PISTON*	BC250014195	2
24	MUELLE VALVULA / *VALVE SPRING*	BC250014197	2
25	PISTÓN / *PISTON*	BC250014200	2
26	JUEGO ARANDELAS D.8X24X0,1 / *WASHER SET*	BC250014216	8
27	TUERCA M6X0,5 / *NUT M6X0,5*	BC25714202	2
28	JUEGO ARANDELAS / *WASHER SET*	BC250014217	2
29	TUBO HIDRÁULICO D. 29 M29,3X1 / *HYDRAULIC TUBE*	BC250014117	2
30	TORNILLO REGULACIÓN VARILLA M6X0.5 / *PIN REGULATOR SCREW*	BC25714170	2

Nº	DESCRIPCION / *DESCRIPTION*	EC-FSE 2003	Cant.
31	MUELLE VARILLA VÁLVULA / *PIN VALVE SPRING*	BC25714135	2
32	PISTON COMPRESIÓN / *COMPRESSION PISTON*	BC250014140	2
33	ARANDELA VALVULA D. 8X24X0,4 / *VALVE WASHER*	BC250014215	2
34	TORICA COMPRESIÓN NBR 21X2 / *COMPRESSION O'RING*	BC250014204	2
35	ARANDELAS TAPÓN COMPRESIÓN 6X18X0,2 / *COMPRESSION CAP WASHERS*	BC250014136	2
36	TAPÓN COMPRESIÓN / *COMPRESSION CAP*	BC250014139	2
37	PUNTERA SUSPENSIÓN IZQUIERDA / *LEFTT FRONT BOTTLE END*	BC250014143	1
38	PUNTERA BOTELLA DERECHA / *RIGHT FRONT BOTTLE END*	BC250014142	1
39	TORNILLO BASE BOTELLA M8X30 / *BOTTLE BASE SCREW M8X30*	BC250014209	4
40	SUSPENSIÓN DELANTERA INVERTIDA 43. WP / *WP UPSIDE-DOWN FRONT FORK*	BC250014000	1
41	SEGMENTO / *SEGMENT*	BC250014113	2
42	JUEGO PROTECTOR HORQUILLA / *FORK PROTECTORS SET*	BC250114040	1
44	CASQUILLO PROTECTOR SUSPENSIÓN / *FORK PROTECTOR BUSHING*	BC250014050	8
45	FIJACIÓN LATIGUILLO IZQUIERDO / *LEFT HOSE HOLDER*	BC250014155	1
46	FIJACIÓN LATIGUILLO DERECHO / *RIGHT HOSE HOLDER*	BC250014156	1
47	TORNILLO / *SCREW*	T0206016	2
48	TORNILLO / *SCREW*	T0316012	6
49	CTO. SUSPENSIÓN WP DELANTERA / *FRONT SUSPENSION WP SET*	BC250214000	1

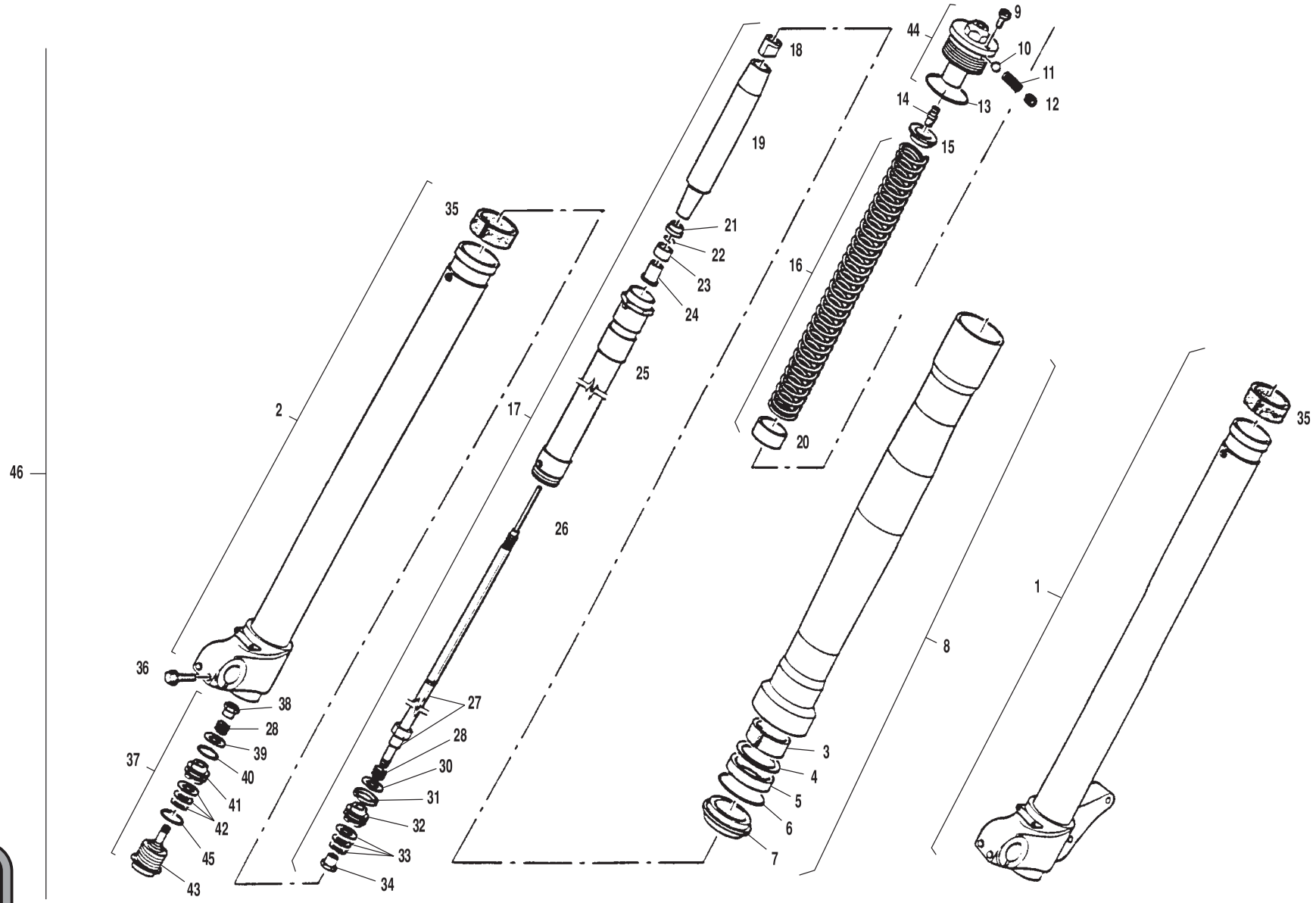
9
44
10
11
12
13
14
15
18
19
21
22
23
24
16
20
35
25
2
17
46
26
1
8
36
38
28
39
37
40
41
42
45
43
27
28
30
31
32
33
34
3
4
5
6
7
35

Nº	DESCRIPCION / *DESCRIPTION*	FSE 2003	Cant.
1	BASE HORQUILLA IZQUIERDA / *LEFT FORK BASE*	BE250114143	1
2	BASE HORQUILLA DERECHA / *RIGHT FORK BASE*	BE250114142	1
3	GLACIER BOTELLA / *GLACIER*	BE25714134	2
4	ANILLO DE CIERRE / *CLOSE RING*	BE250114133	2
5	RETÉN SUSPENSIÓN 45X58X11 / *SUSPENSION SEAL*	C240701	2
6	ANILLO DE CIERRE / *CLOSE RING*	BE25714132	2
7	GUARDAPOLVO / *DUSTKEEPER*	BE25714131	2
8	CTO. BARRA SUSPENSIÓN / *FORK SET*	BE250114110	2
9	TORNILLO Y JUNTA TÓRICA / *BOLT AND O'RING*	BE25714103	2
10	TÓRICA TAPÓN REGULACIÓN / *REGULATION CAP O'RING*	BE250114225	2
11	MUELLE TAPÓN REGULACIÓN / *REGULATION CAP SPRING*	BE250114226	2
12	TORNILLO PEQUEÑO TAPÓN REGULACIÓN / *SMALL BOLT*	BE250114227	2
13	TÓRICA TAPÓN REGULACIÓN / *REGULATION CAP O'RING*	BE250114104	2
14	CASQUILLO REGULACIÓN / *REGULATION BUSHING*	BE250114112	2
15	CASQUILLO GUIA MUELLE / *SPRING GUIDE BUSHING*	BE250114107	2
16	KIT MUELLE Y CASQUILLO / *BUSHING AND SPRING SET*	BE250114228	1
17	CONJ. AMORTIGUACIÓN SUSPENSIÓN / *SUSPENSION SET*	BE250114129	2
18	TUERCA BLOQUEADOR M12X25 / *LOCKER NUT*	BE250114242	2
19	TUBO GUIA MUELLE / *SPRING GUIDE TUBE*	BE250114229	2
20	TOPE PRECARGA / *PRELOAD HOLDER*	BE250114109	2
21	TOPE DE FONDO / *BOTTOM HOLDER*	BE250114230	2
22	ANILLO RETENCIÓN / *HOLDER RING*	BE250114231	2
23	TOPE FONDO HUG D45 / *BOTTOM HOLDER HUG D45*	BE250114232	2
24	TOPE FONDO USD D45 / *BOTTOM HOLDER USD D45*	BE250114233	2
25	CARTUCHO AMORTIGUADOR / *SUSPENSION CARTRIDGE*	BE250114114	2
26	VARILLA INTERNA / *INTERNAL PIN*	BE250114234	2
27	CTO. VARILLA / *PIN SET*	BE250114116	2
28	CASQUILLO VARILLA / *PIN BUSHING*	BE250114118	4
29	CLIP PROTECCIÓN HORQUILLA MARZOCCHI / *PROTECTION CLIP*	BE250114051	2
30	JUNTA 19X8.1X0.3 / *GASKET 19X8.1X0.3*	BE250114235	2
30	JUNTA 21X8.1X0.3 / *GASKET 21X8.1X0.3*	BE250114236	2
30	JUNTA 20X8.1X0.3 / *GASKET 20X8.1X0.3*	BE250114237	2

Nº	DESCRIPCION / *DESCRIPTION*	EC-FSE 2003	SM -FSE	Cant.
30	JUNTA 23X8.1X0.2 / *GASKET 23X8.1X0.2*	BE250114243		2
31	SEGMENTO PISTÓN / *PISTON SEGMENT*	BE250114120		2
32	PISTÓN SUSPENSIÓN / *SUSPENSION PISTON*	BE250114119		2
33	ARANDELA SUSPENSIÓN 15X8.1X0.1 / *SUSPENSION WASHER*	BE250114238		2
33	ARANDELA SUSPENSIÓN 19X8.1X0.1 / *SUSPENSION WASHER*	BE250114239		2
33	ARANDELA SUSPENSIÓN 17X8.1X0.1 / *SUSPENSION WASHER*	BE250114240		2
33	ARANDELA SUSPENSIÓN 21X8.1X0.1 / *SUSPENSION WASHER*	BE250114241		4
34	VÁLVULA BASE / *BASE VALVE*	BE250114126		2
35	CASQUILLO INTERIOR BOTELLA / *INNER BUSHING*	BE250114128		2
36	TORNILLO 6X25 DIN 6921 8.8 / *BOLT 6X25*	BE250114144		4
37	GRUPO AMORTIGUADOR / *SUSPENSION GROUP*	BE250114124		2
38	CASQUILLO M6X0.75 / *BUSHING*	BE250114244		2
39	JUNTA 23X8.1X0.3 C72 BLU / *GASKET 23X8.1X0.3*	BE250114245		2
40	TÓRICA 2087 D21.95 S1.78 / *O`RING 2087*	BE250114246		2
41	PISTÓN D.26 SINTER. / *PISTON D.26*	BE250114247		2
42	JUNTA 15X8.1X0.1 / *GASKET 15X8.1X0.1*	BE250114248		2
42	JUNTA 19X8.1X0.1 / *GASKET 19X8.1X0.1*	BE250114248-1		2
42	JUNTA 23X8.1X0.1 / *GASKET 23X8.1X0.1*	BE250114248-2		6
42	JUNTA 17X8.1X0.1 / *GASKET 17X8.1X0.1*	BE250114248-3		2
42	JUNTA 20X8.1X0.1 / *GASKET 20X8.1X0.1*	BE250114248-4		2
42	JUNTA 22X8.1X0.1 / *GASKET 22X8.1X0.1*	BE250114248-5		2
42	JUNTA 12X8.1X0.1 / *GASKET 12X8.1X0.1*	BE250114248-6		2
42	JUNTA 14X8.1X0.1 / *GASKET 14X8.1X0.1*	BE250114248-7		4
42	JUNTA 16X8.1X0.1 / *GASKET 16X8.1X0.1*	BE250114248-8		2
43	VÁLVULA DE AJUSTE / *ADJUSTING VALVE*	BE250114249		2
44	CTO. TAPÓN REGULACIÓN / *REGULATION CAP SET*	BE250114105		2
45	TÓRICA 2100 D25.1 S1.78 / *O'RING 2100*	BE250114		2
46	CTO. SUSPENSION DELANTERA MARZOCCHI / *MARZOCCHI FRONT SUSP.*	BFS400314000MZ	BE250114000	1

Horquilla ÖHLINS / ÖHLINS fork

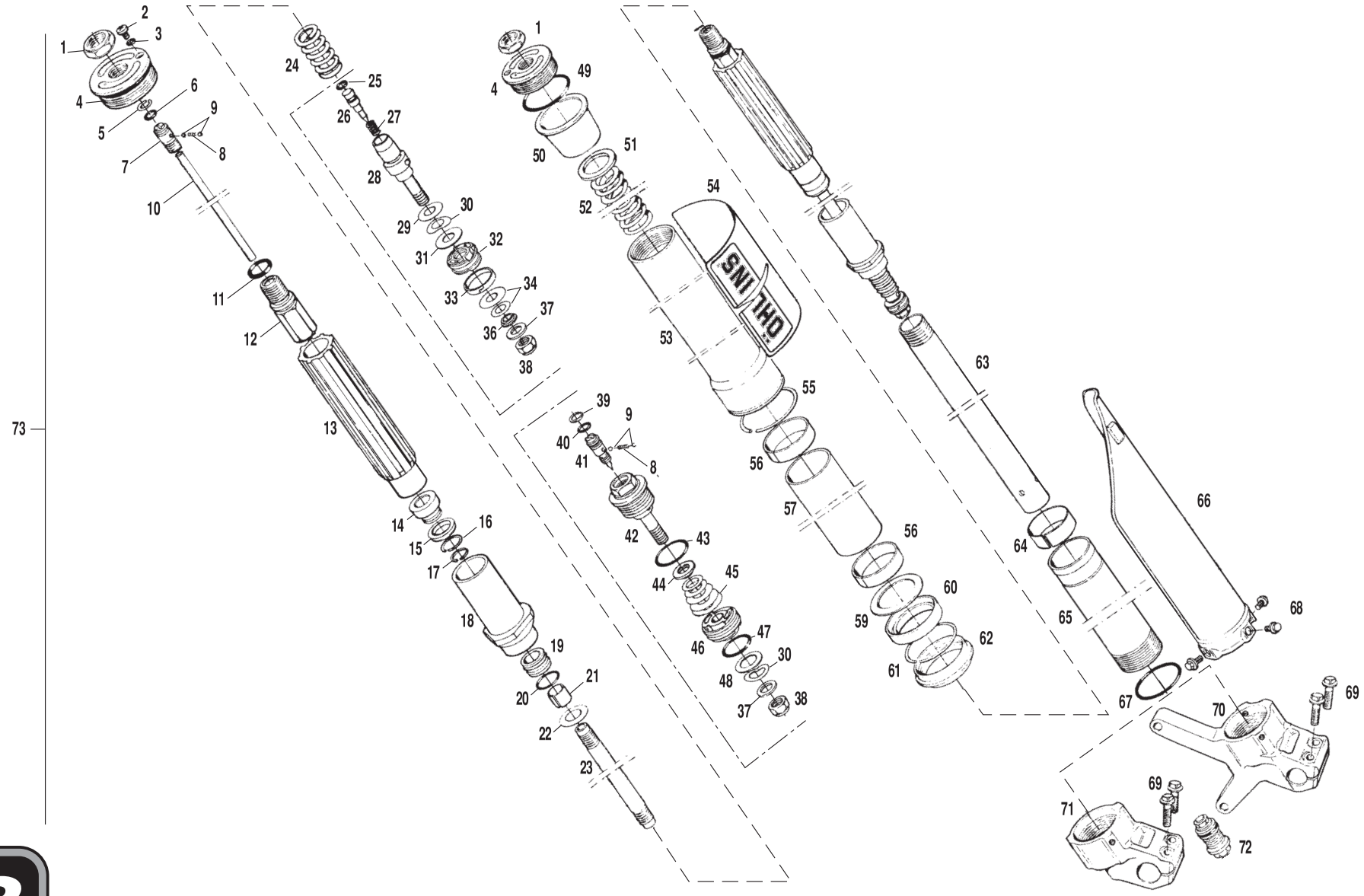

Nº	DESCRIPCION / *DESCRIPTION*	FSE 2003	Cant.
1	*LOCK NUT*		2
2	*SCREW*		2
3	*O-RING*		2
4	*TOP CAP*		2
5	*CIRCLIP*		2
6	*O-RING*		2
7	*ADJUSTMENT SCREW*		1
8	*SPRING*		2
9	*BALL*		4
10	*ADJUSTMENT ROD*		2
11	*O-RING*		2
12	*NEEDLE HOUSING*		2
13	*GUIDING SLEEVE*		2
14	*SLEEVE*		2
15	*HYDRAULIC STOP*		2
16	*CIRCLIP*		2
17	*CIRCLIP*		2
18	*CYLINDER TUBE CAP*		2
19	*BUSHING HOLDER*		2
20	*O-RING*		2
21	*BUSHING*		2
22	*WASHER*		2
23	*SHAFT*		2
24	*SPRING*		2
25	*O-RING*		2
26	*REBOUND NEEDLE*		2
27	*SPRING*		2
28	*PISTON HOLDER*		2
29	*SHIM WASHER*		8
30	*WAVE WASHER*		6
31	*SHIMS*		
32	*REBOUND PISTON*		2
33	*PISTON RING*		2
34	*SHIM*		
36	*CLAMP WASHER*		2
37	*WASHER*		2

Nº	DESCRIPCION / *DESCRIPTION*	FSE 2003	Cant.
38	*LOCK NUT*		2
39	*CIRCLIP*		2
40	*O-RING*		2
41	*ADJUSTMENT NEEDLE*		2
42	*END PIECE*		2
43	*O-RING*		2
44	*CLAMP WASHER*		2
45	*SHIMS*		2
46	*COMPRESSION PISTON*		2
47	*O-RING*		2
48	*SHIMS*		2
49	*O-RING*		2
50	*SPRING SUPPORT*		2
51	*PRELOAD WASHER*		
52	*SPRING FRONT FORK*		2
53	*FORK LEG OUTER*		2
54	*COVER STICKER ÖHLINS*		2
55	*CIRCLIP*		2
56	*BUSHING LOWER*		4
57	*SLEEVE*		2
59	*WASHER*		2
60	*SEAL*		2
61	*CIRCLIP*		2
62	*SCRAPER*		2
63	*CILINDER TUBE CARTRIDGE*		2
64	*BUSHING UPPER*		2
65	*FORK LEG INNER*		2
66	PROTECTOR HORQUILLA / *COVER FORK LEG PAIR*	BC250114040	1
67	*O-RING*		2
68	*BOLT*		6
69	*BOLT FORK BOTTOM*		4
70	*FORK BOTTOM LEFT*		1
71	*FORK BOTTOM RIGHT*		1
72			1
73	CTO. SUSPENSION DELANTERA ÖHLINS / *ÖHLINS FRONT SUSPENSION SET*	BE250314000OH	1